MY OLD Desktop PAL EDITION

A LEGO® project by Chris McVeigh

chrismcveigh.com

Element ID	Color	Description	Quantity
6143318	Black	3.2 Shaft W/3.2 Hole	3
4121715	Black	Connector Peg W. Friction	4
317626	Black	Coupling Plate 2X2	1
306926	Black	Flat Tile 1X2	1
6015891	Black	Holder Ø3.2 W/Tube Ø3.2 Hole	1
6012466	Black	Magnifying Glass 40/26	1
6100627	Black	Pl.Round 1X1 W. Throughg. Hole	4
302426	Black	Plate 1X1	1
393826	Black	Plate 1X2 (Rocking)	1
4296142	Black	Plate 1X3 W/Stub/Along/U.P.	1
4565323	Black	Plate 2X2 W 1 Knob	1
393726	Black	Rocker Bearing 1X2	1
4653208	Black	Shaft 3M Ø3.2	2
4289538	Black	Stick Ø 3.2 W. Holder	2
6104209	Black	T-Piece	1

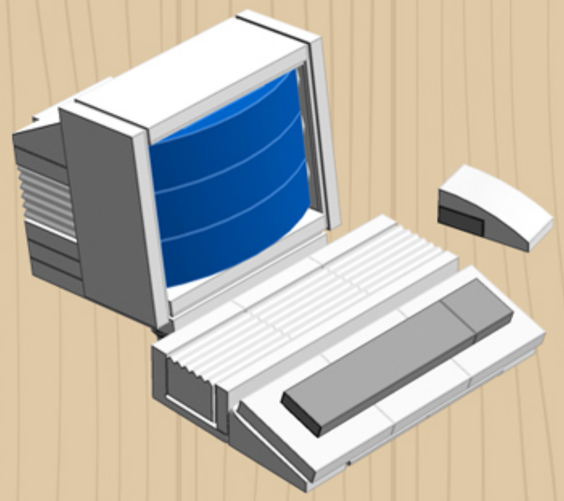

	Element ID	Color	Description	Quantity
	6030875	Black	Tool Set (Hammer)	1
	6030875	Black	Tool Set (Open Firm Key)	1
	4118793	Brick Yellow	Angular Brick 1X1	2
	4113915	Brick Yellow	Brick 1X1	1
	4579260	Brick Yellow	Brick 1X1 W. 1 Knob	1
	4114026	Brick Yellow	Flat Tile 1X2	1
	4578107	Brick Yellow	Frame 1X2X2	1
	4113917	Brick Yellow	Plate 1X2	1
	4624086	Brick Yellow	Roof Tile 1X2X2/3, Abs	1
	302123	Bright Blue	Plate 2X3	1
	4649773	Bright Blue	Plate W. Bow 1X4X2/3	3
	6058221	Dark Brown	Plate 1X2	6
	4518687	Dark Brown	Plate 2X6	4
	6158469	Dark Stone Grey	3.2 Shaft W/5.9 Ball	1
	4211044	Dark Stone Grey	Angular Brick 1X1	4

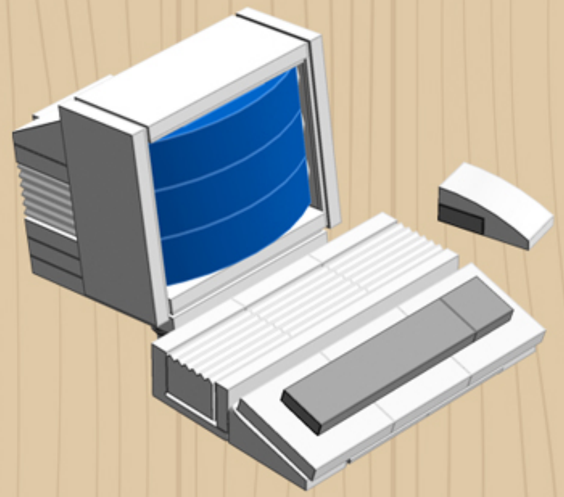

	Element ID	Color	Description	Quantity
	4211052	Dark Stone Grey	Flat Tile 1X2	4
	4211055	Dark Stone Grey	Flat Tile 2X2	4
	6055313	Dark Stone Grey	Flat Tile 2x2 Round W. Hole Ø4.85	3
	4560184	Dark Stone Grey	Flat Tile 2X4	2
	4211063	Dark Stone Grey	Plate 1X2	2
	4631385	Earth Blue	Flat Tile 1X1	2
	4528488	Earth Blue	Flat Tile 1X2	1
	4528981	Earth Blue	Plate 1X2	2
	6004990	Medium Stone Grey	Angular Plate 1.5 Bot. 1X2 1/2	4
	4654580	Medium Stone Grey	Angular Plate 1.5 Bot. 1X2 2/2	4
	4558953	Medium Stone Grey	Brick 1X1 W. 1 Knob	2
	4211388	Medium Stone Grey	Brick 1X2	2
	6015344	Medium Stone Grey	Brick 1X2 W. 2 Knobs	2
	6095719	Medium Stone Grey	Dome 2X2, Inverted W. One Stud	1
	4211415	Medium Stone Grey	Flat Tile 1X1	1

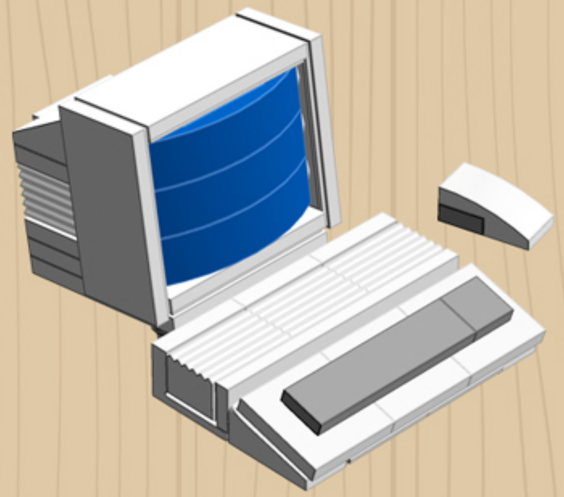

	Element ID	Color	Description	Quantity
	4211414	Medium Stone Grey	Flat Tile 1X2	6
	4211356	Medium Stone Grey	Flat Tile 1X4	1
	4211549	Medium Stone Grey	Flat Tile 1X6	4
	6124825	Medium Stone Grey	Pl.Round 1X1 W. Throughg. Hole	3
	4211399	Medium Stone Grey	Plate 1X1	5
	4211398	Medium Stone Grey	Plate 1X2	8
	4244627	Medium Stone Grey	Plate 1X2 W. Stick 3.18	4
	4598526	Medium Stone Grey	Plate 1X2 W. Vertical Grip	1
	4211804	Medium Stone Grey	Plate 1X2 W/Fork/Vertical/End	1
	4556157	Medium Stone Grey	Plate 1X2 W/Holder, Vertical	1
	4211429	Medium Stone Grey	Plate 1X3	5
	4211445	Medium Stone Grey	Plate 1X4	1
	4599498	Medium Stone Grey	Plate 1X4 W. 2 Knobs	2
	4211438	Medium Stone Grey	Plate 1X6	2
	4211425	Medium Stone Grey	Plate 1X8	5

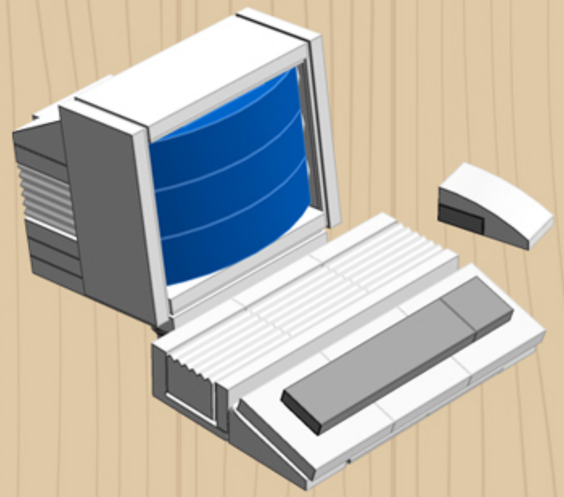

	Element ID	Color	Description	Quantity
	4211475	Medium Stone Grey	Plate 2X2 Round	4
	4211404	Medium Stone Grey	Plate 4X6	1
	4211405	Medium Stone Grey	Plate 6X10	2
	4211469	Medium Stone Grey	Rocker Bearing 1X2	2
	4211437	Medium Stone Grey	Roof Tile 1X2 Inv.	4
	4211535	Medium Stone Grey	Technic Brick 1X1	1
	6138696	Medium Stone Grey	Wall Double Corner 1X2X1	1
	4211515	Medium Stone Grey	Wall Element 1X2X1	1
	4550169	New Dark Red	Flat Tile 1X1	2
	4539105	New Dark Red	Flat Tile 2X2	1
	4539097	New Dark Red	Plate 1X2	4
	6123759	Reddish Brown	Angle Plate 1X2/1X4	1
	4618545	Reddish Brown	Brick 1X1 W. 1 Knob	8
	4226966	Reddish Brown	Brick 1X1X5	6
	4211220	Reddish Brown	Brick 1X3	2

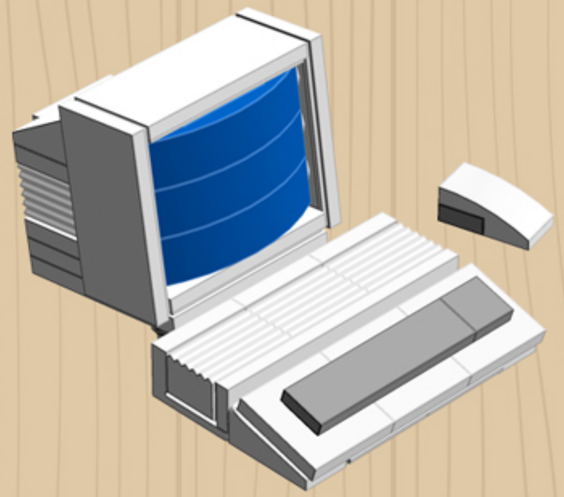

	Element ID	Color	Description	Quantity
	4211193	Reddish Brown	Brick 1X6	10
	4263776	Reddish Brown	Brick 1X8	14
	4211257	Reddish Brown	Corner Plate 1X2X2	2
	4211151	Reddish Brown	Flat Tile 1X2	7
	4211194	Reddish Brown	Flat Tile 1X4	2
	4585337	Reddish Brown	Flat Tile 1X8	8
	4271949	Reddish Brown	Flat Tile 2X2	17
	4579690	Reddish Brown	Flat Tile 2X4	10
	6047551	Reddish Brown	Mini Brush "No. 1"	1
	4221744	Reddish Brown	Plate 1X1	6
	4211150	Reddish Brown	Plate 1X2	10
	6092590	Reddish Brown	Plate 1X2 W. 1 Knob	14
	4211152	Reddish Brown	Plate 1X3	2
	4211190	Reddish Brown	Plate 1X4	2
	4216945	Reddish Brown	Plate 1X8	1

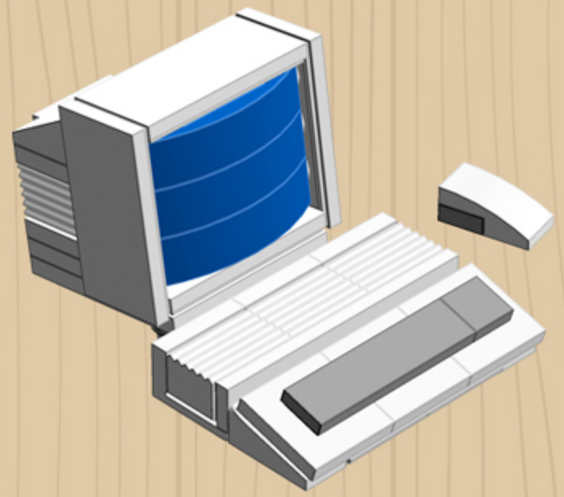

	Element ID	Color	Description	Quantity
	4216695	Reddish Brown	Plate 2X2	8
	4565394	Reddish Brown	Plate 2X2 W 1 Knob	5
	4243838	Reddish Brown	Plate 4X4	4
	4223729	Reddish Brown	Plate 6X8	1
	6102360	Reddish Brown	Plate Round W. 1 Knob	1
	4211199	Reddish Brown	Roof Tile 1X2/45°	2
	4620075	Reddish Brown	Technic Brick 1X1	4
	4211252	Reddish Brown	Technic Brick 1X2, Ø4.9	4
	4528604	Sand Yellow	Plate 1X2	1
	6096993	Silver Metallic	Scissors W. 3.2 Shaft	1
	4244368	Tr. Brown	Roof Tile 1X1X2/3	2
	4638658	Tr. Brown	Wall Element 1X2X2	1
	6153264	Transparent	3.2 Shaft W/ Knob	1
	4248937	Transparent	Diamond with Stick	1
	6039771	Warm Gold	Flat Tile 1X1, Round "No. 14"	1

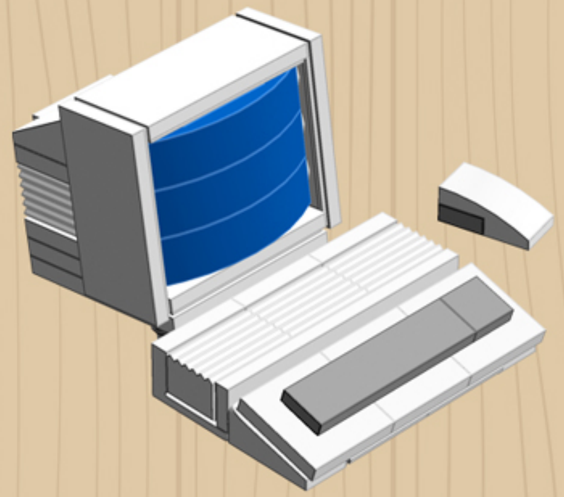

	Element ID	Color	Description	Quantity
	6138682	Warm Gold	Mini Figure Trophy	1
	6069887	Warm Gold	Plate 1X1	1
	407001	White	Angular Brick 1X1	2
	6097637	White	Angular Plate 1.5 Bot. 1X2 2/2	4
	4558952	White	Brick 1X1 W. 1 Knob	2
	243101	White	Flat Tile 1X4	1
	663601	White	Flat Tile 1X6	1
	306801	White	Flat Tile 2X2	2
	4560178	White	Flat Tile 2X4	3
	4536521	White	Frame 1X2X3	4
	6167450	White	Frame Plate 4X4	1
	6129749	White	Glass For Frame 1X2x2	1
	302401	White	Plate 1X1	2
	302301	White	Plate 1X2	8
	6051511	White	Plate 1X2 W. 1 Knob	3

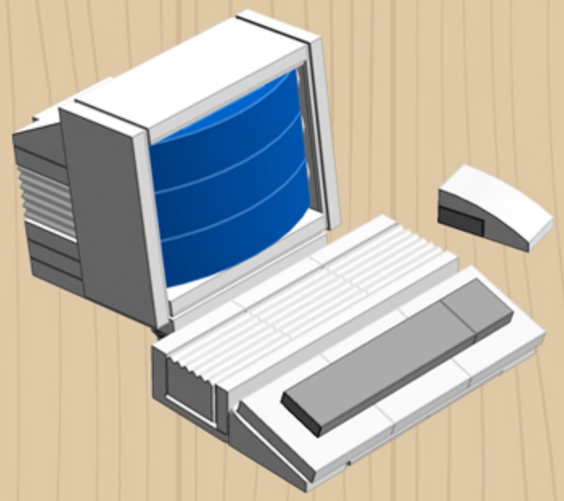

	Element ID	Color	Description	Quantity
	302201	White	Plate 2X2	1
	4612342	White	Plate 2X2 (Rocking)	2
	6126046	White	Plate 2X2 W 1 Knob	4
	302101	White	Plate 2X3	2
	6034044	White	Plate W. Bow 1X2X2/3	1
	287701	White	Profile Brick 1X2	5
	4547489	White	Roof Tile 1X2X2/3, Abs	2
	329701	White	Roof Tile 3X4/25°	1
	6023804	White	Roof Tile W. Lattice 1X2X2/3	2
	4585448	White	Wall Element 1X2X3	4
	4504228	White	Wall Element 1X6X5, Abs	1
	N/A*	Black	Flat Tile 1X1 - 3.5” Disk	1
	N/A*	Black	Flat Tile 1X2 - Cassette (Awesome Mix)	1
	N/A*	Medium Stone Grey	Flat Tile 1X1 - 3.5” Disk	1
	N/A*	Medium Stone Grey	Flat Tile 1X2 - Calculator	1
	N/A*	Medium Stone Grey	Flat Tile 1X2 - Cassette (Summer Hits)	1

** Custom-printed parts are only available with purchase at shop.chrismcveigh.com*

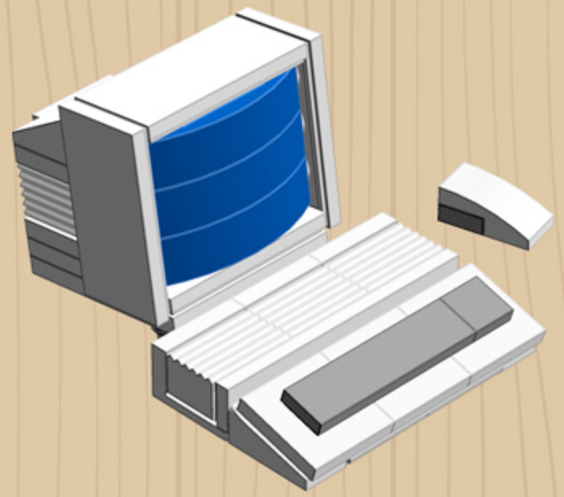

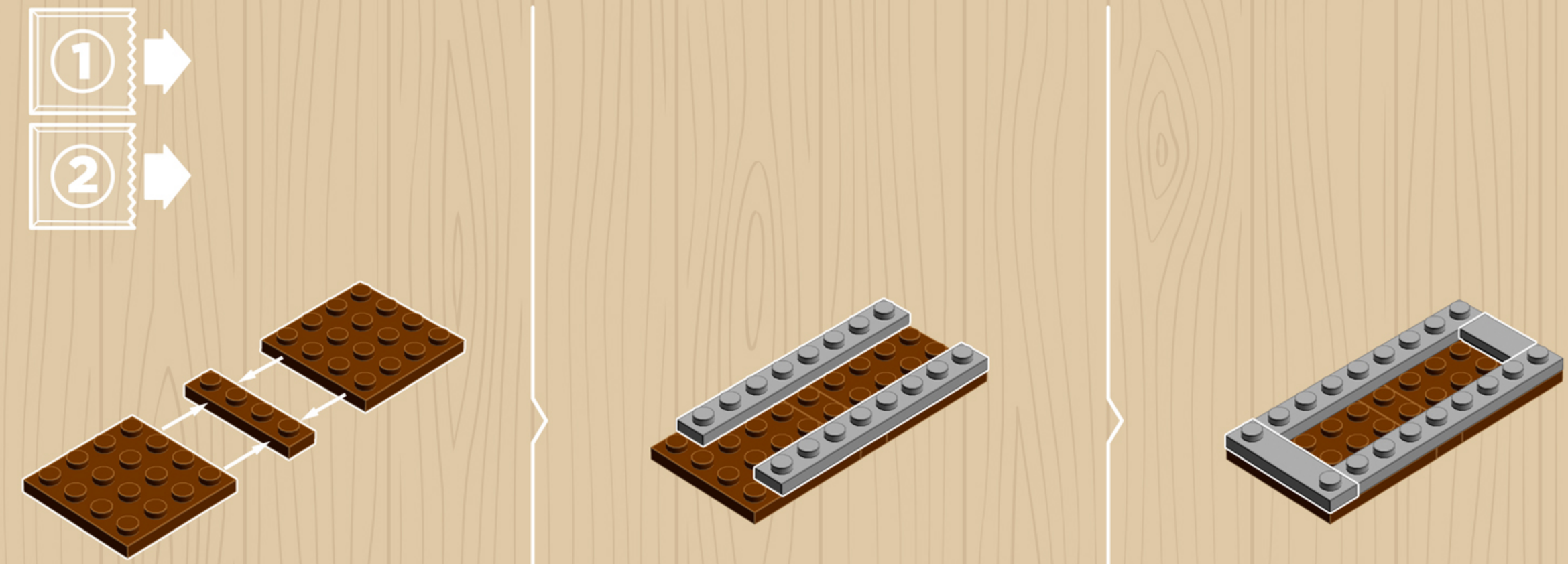
1
2

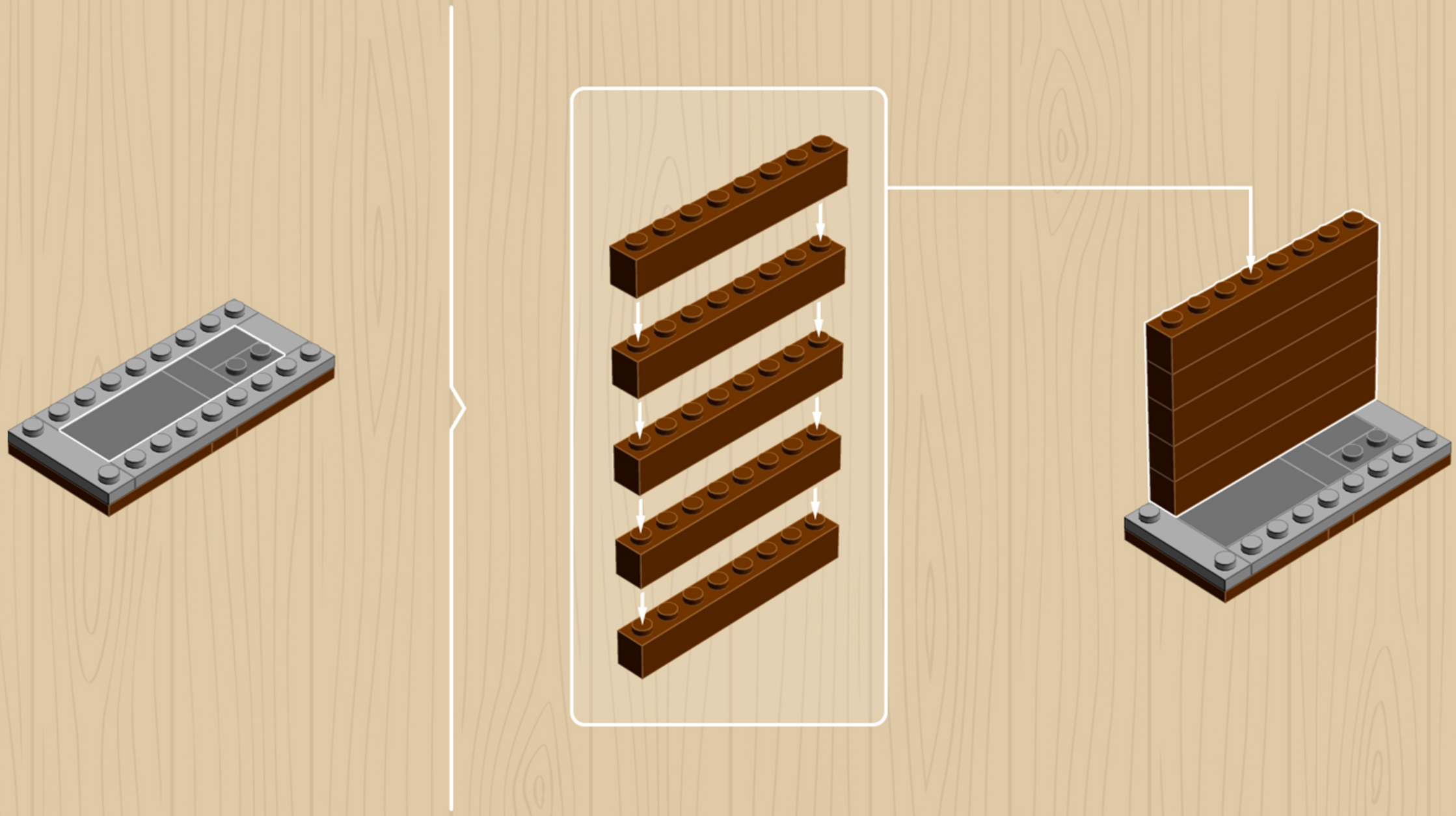

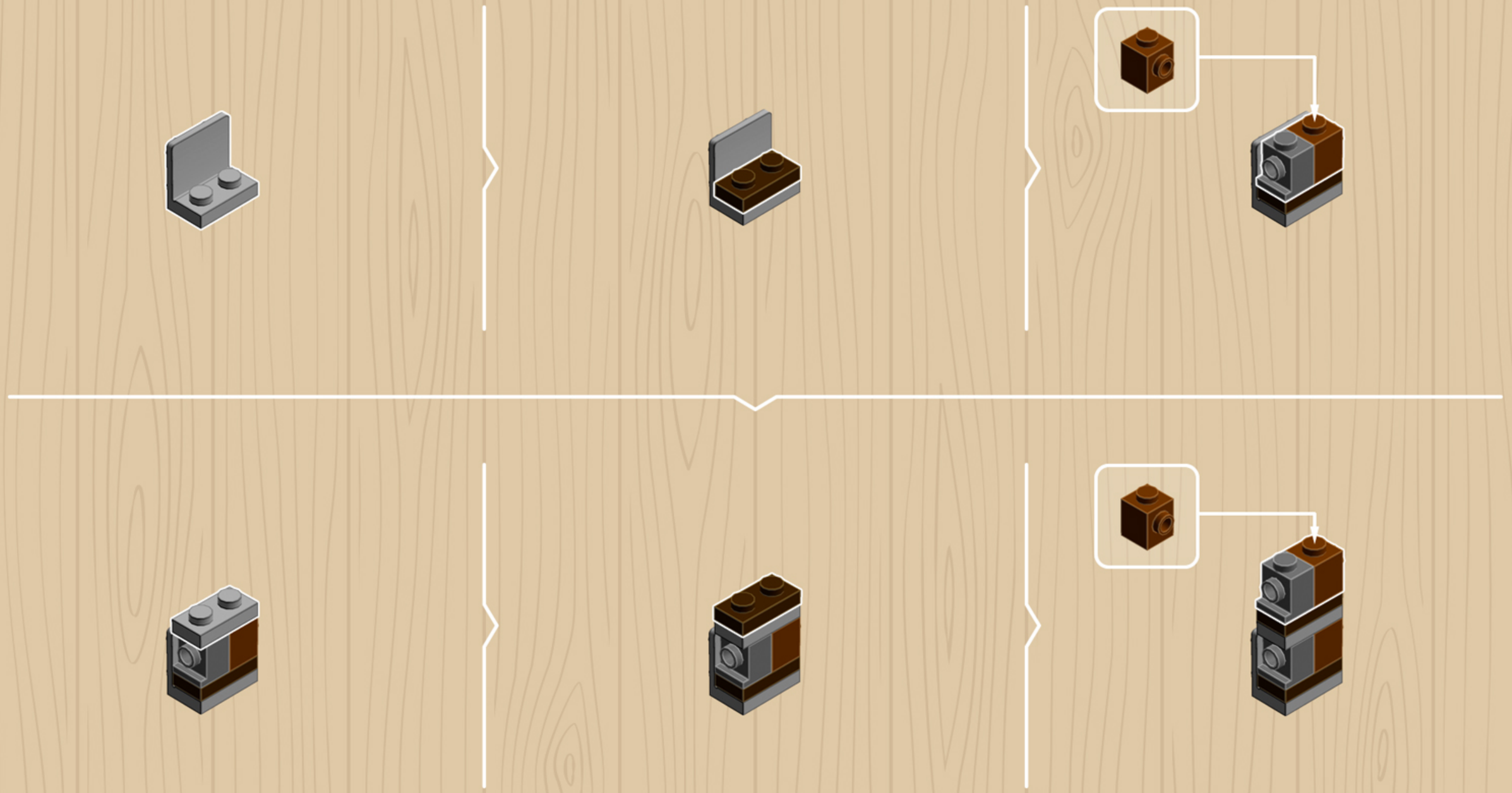

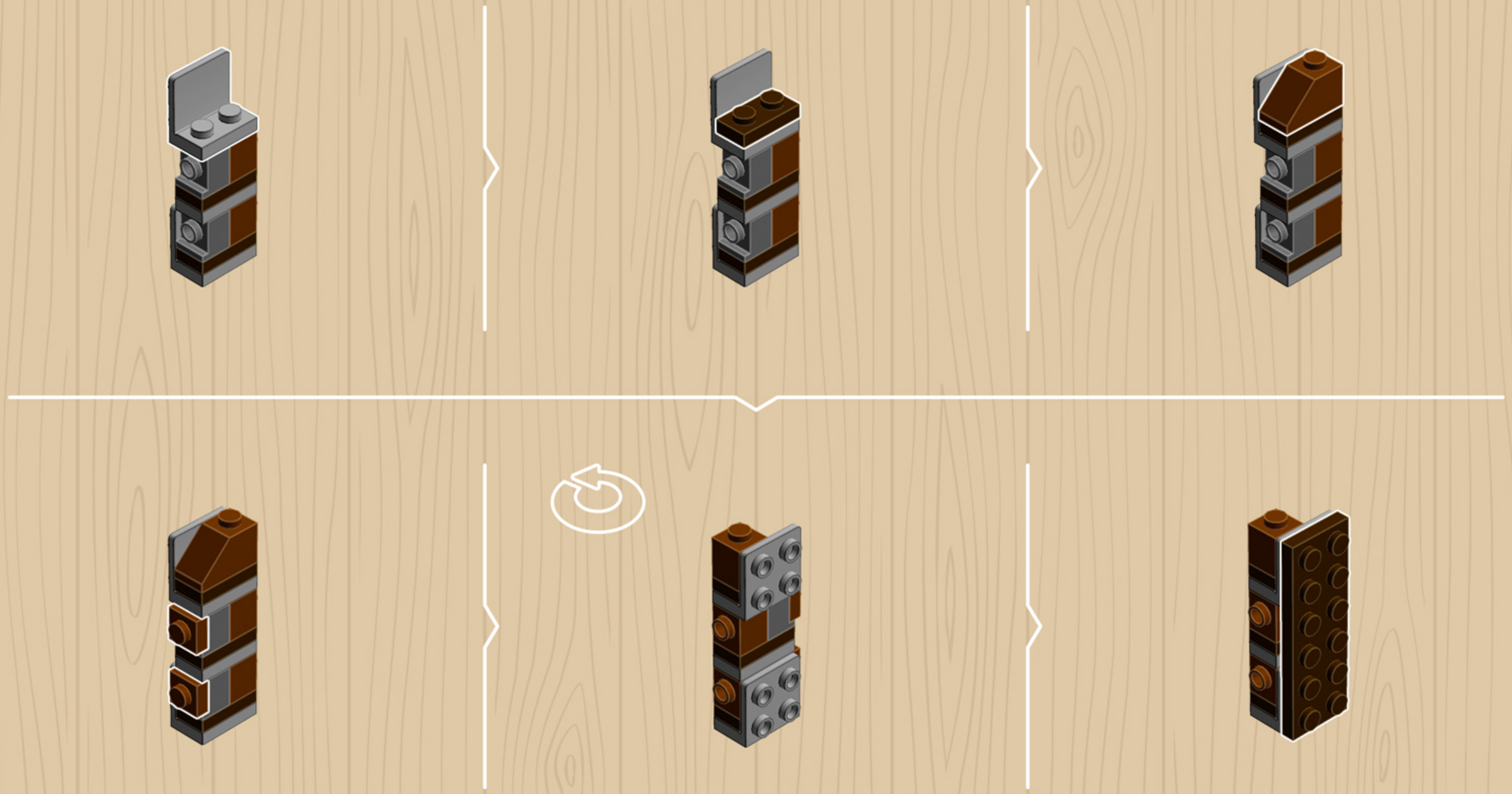

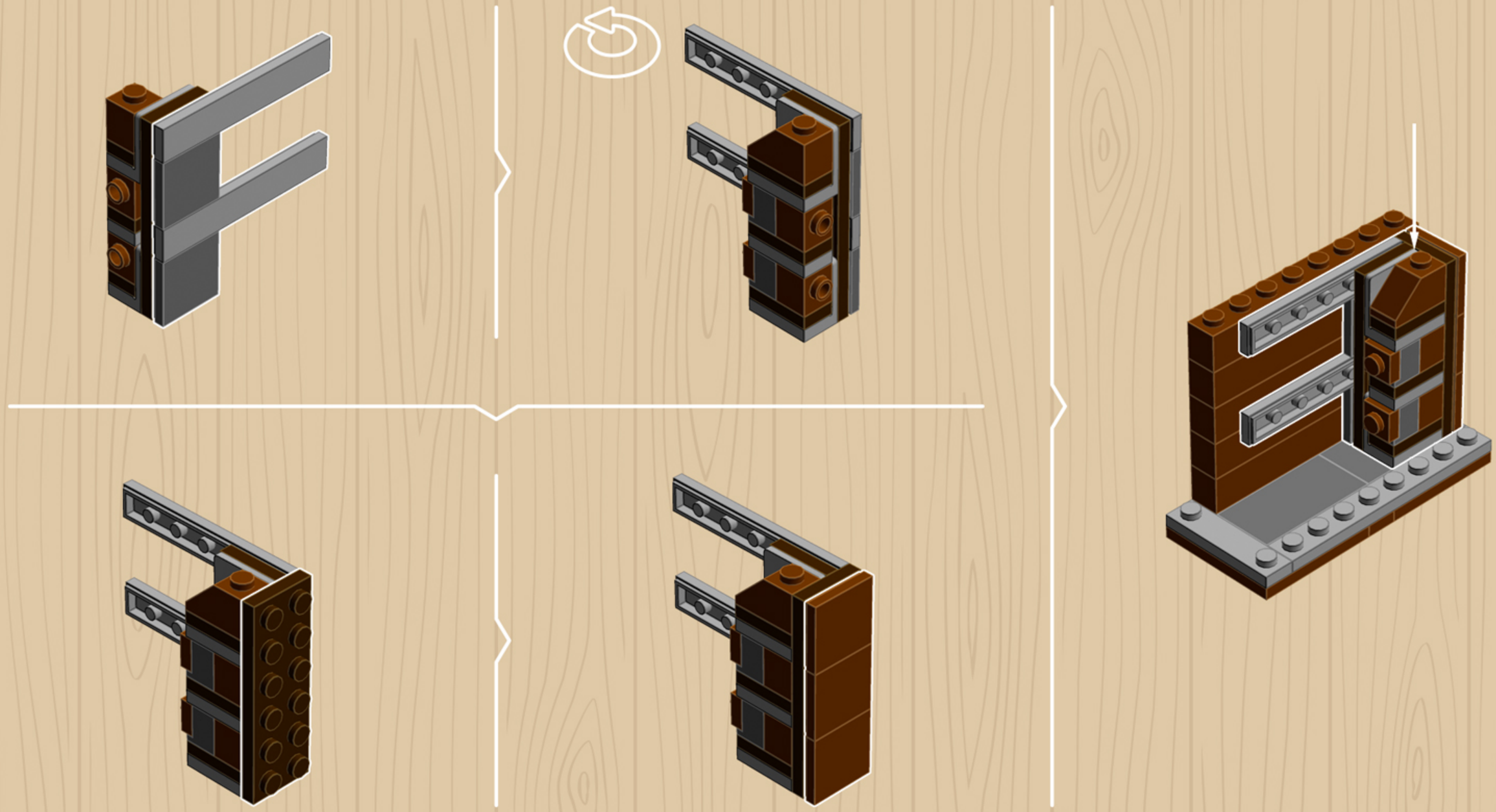

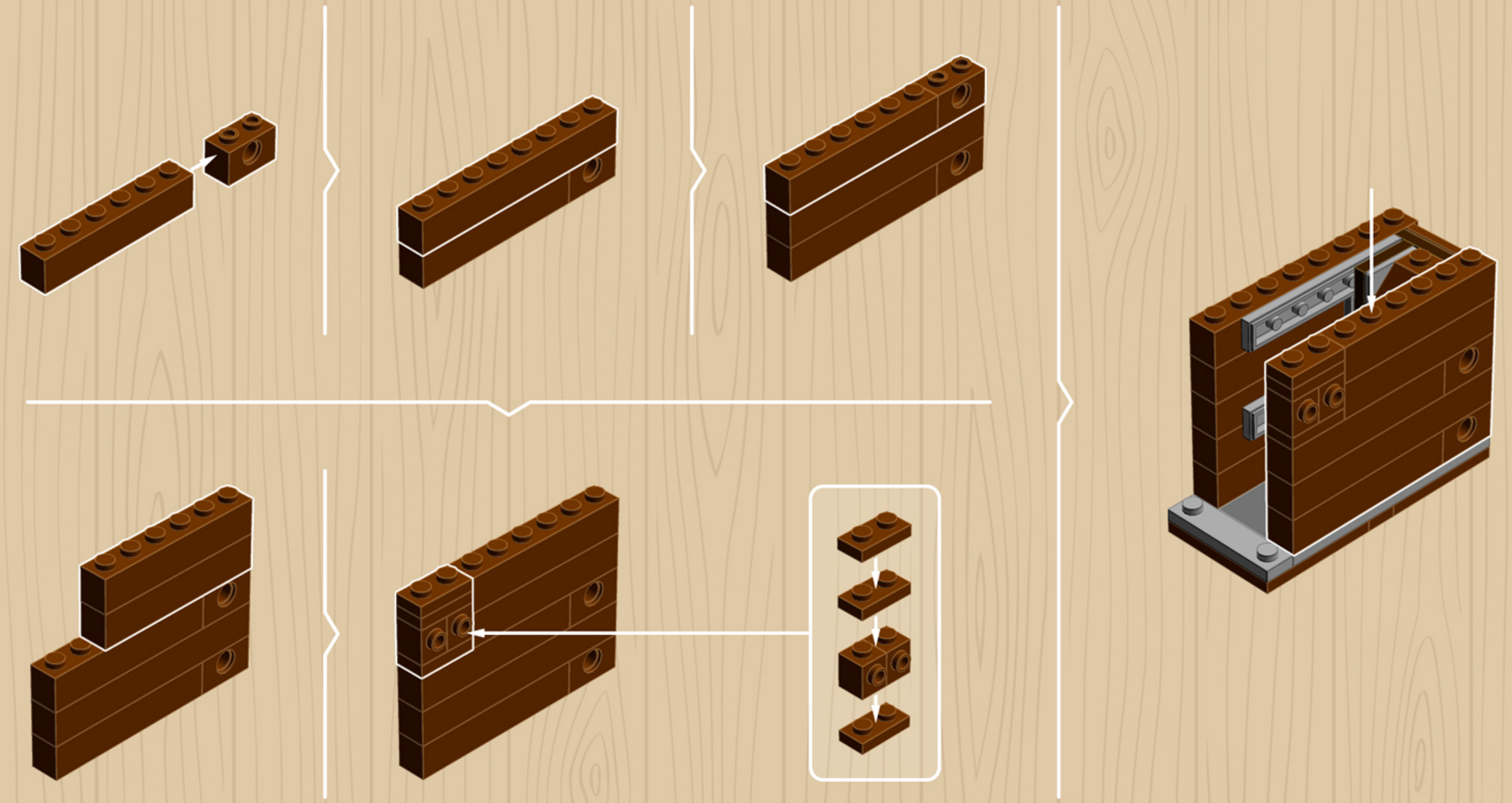

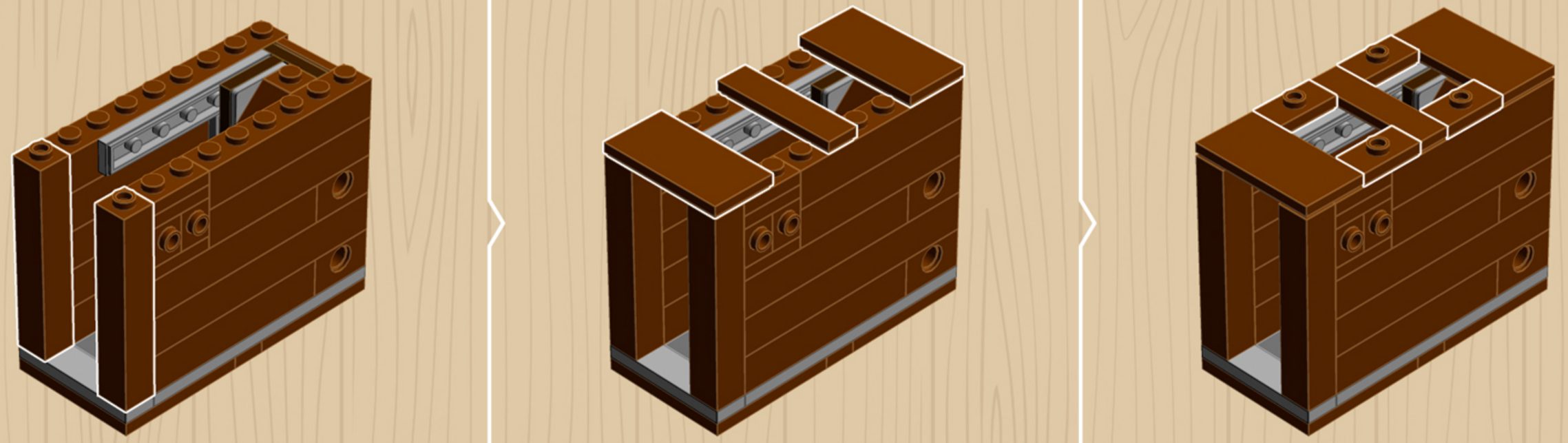

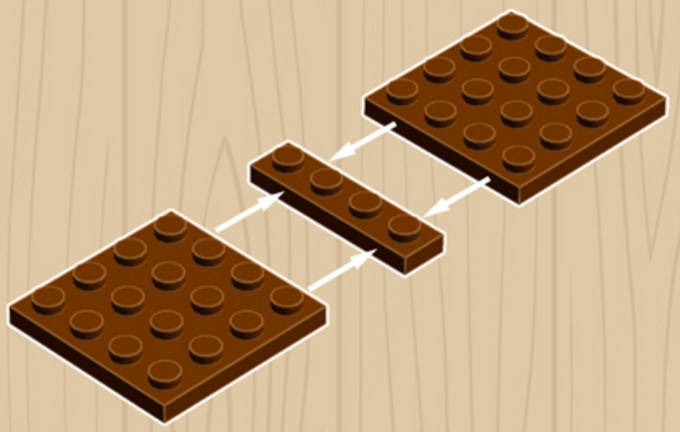

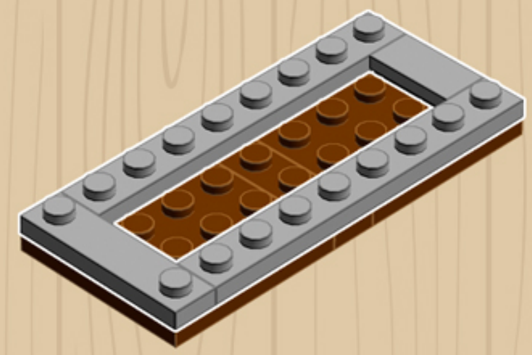

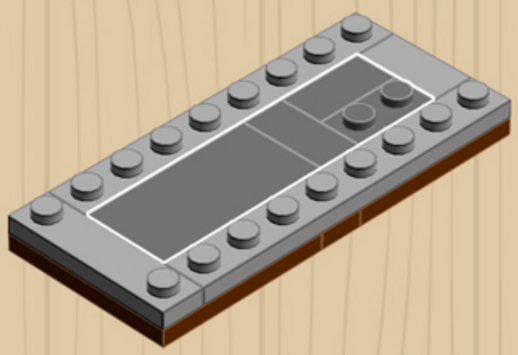

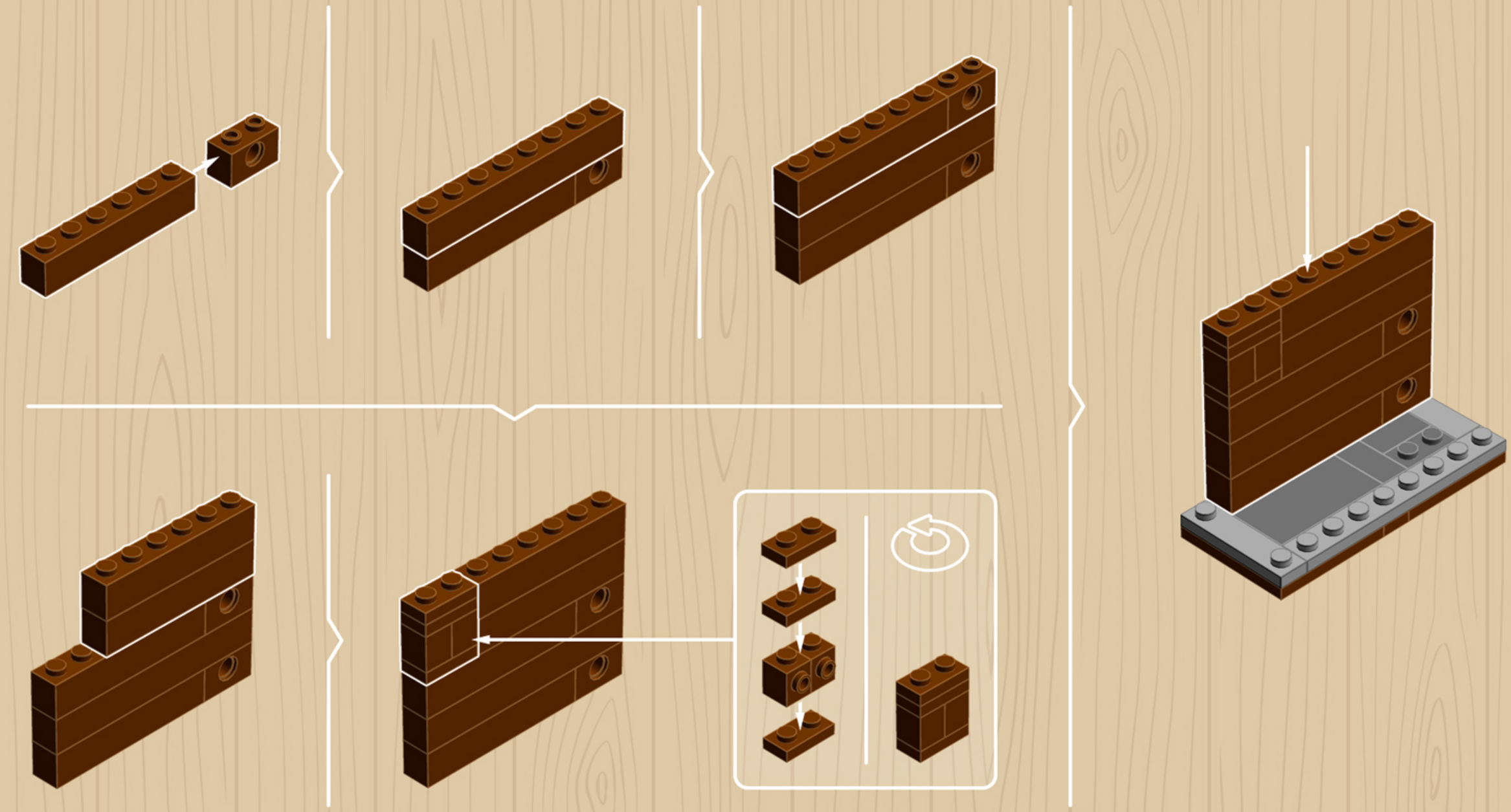

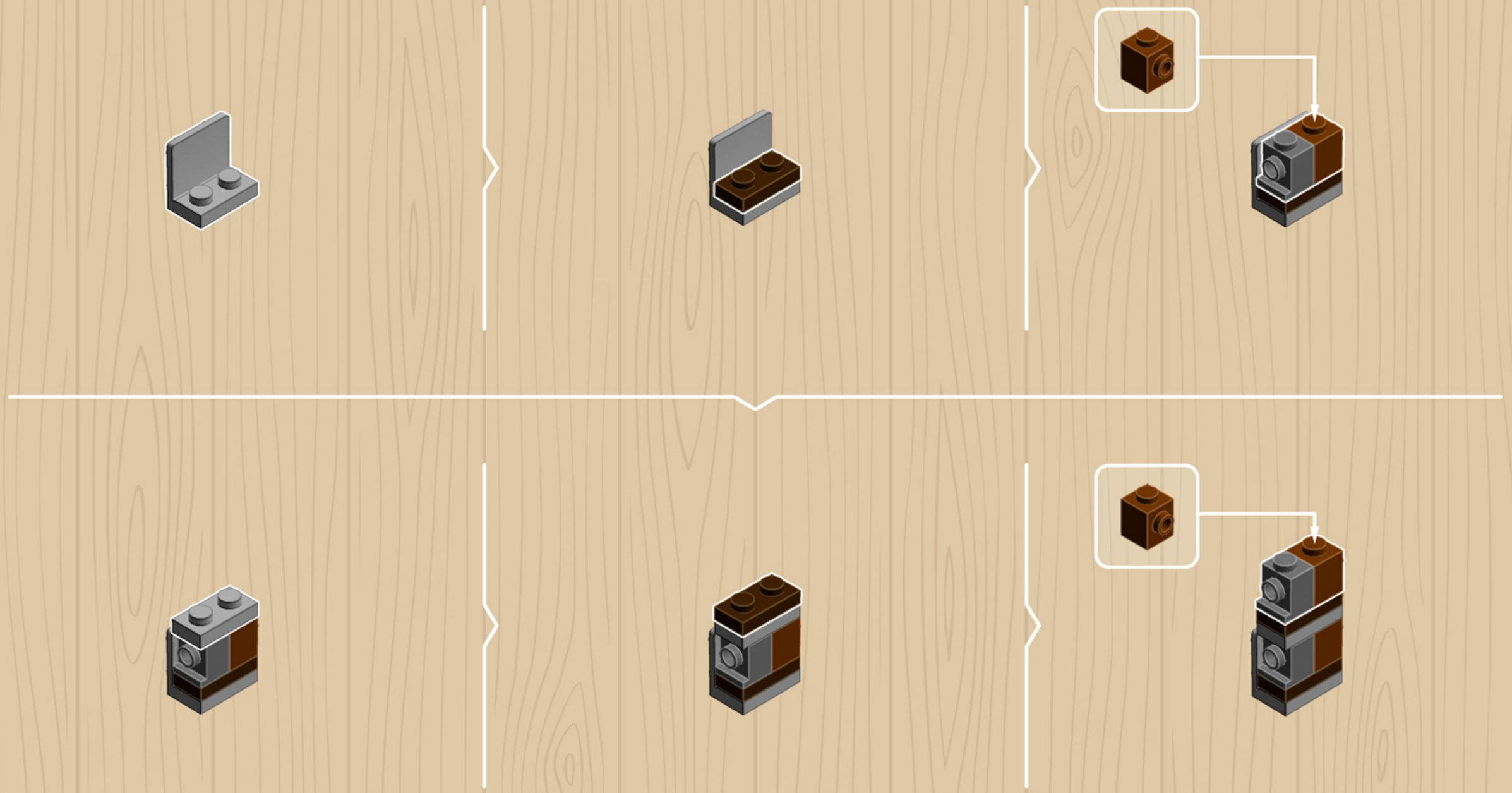

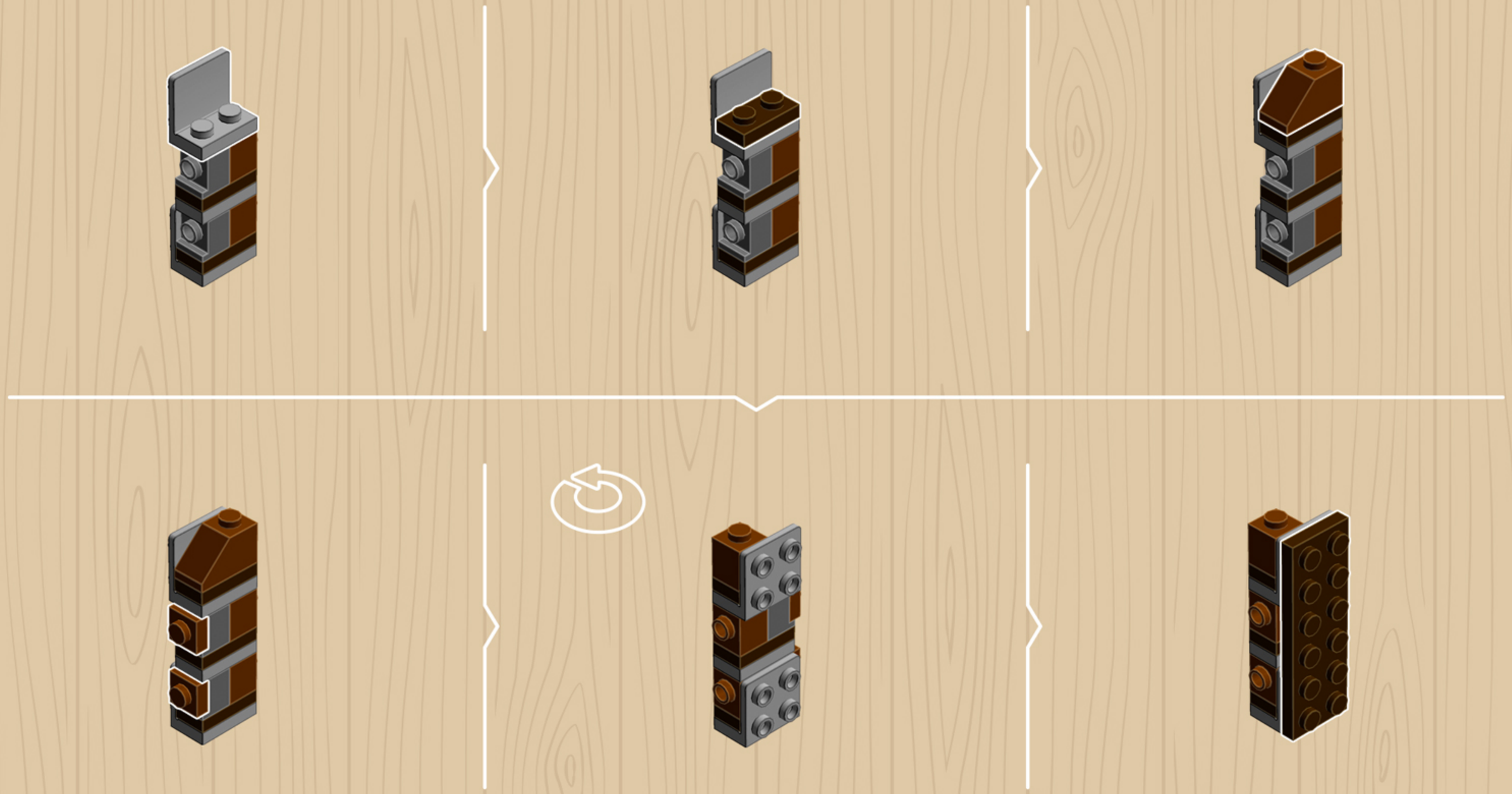

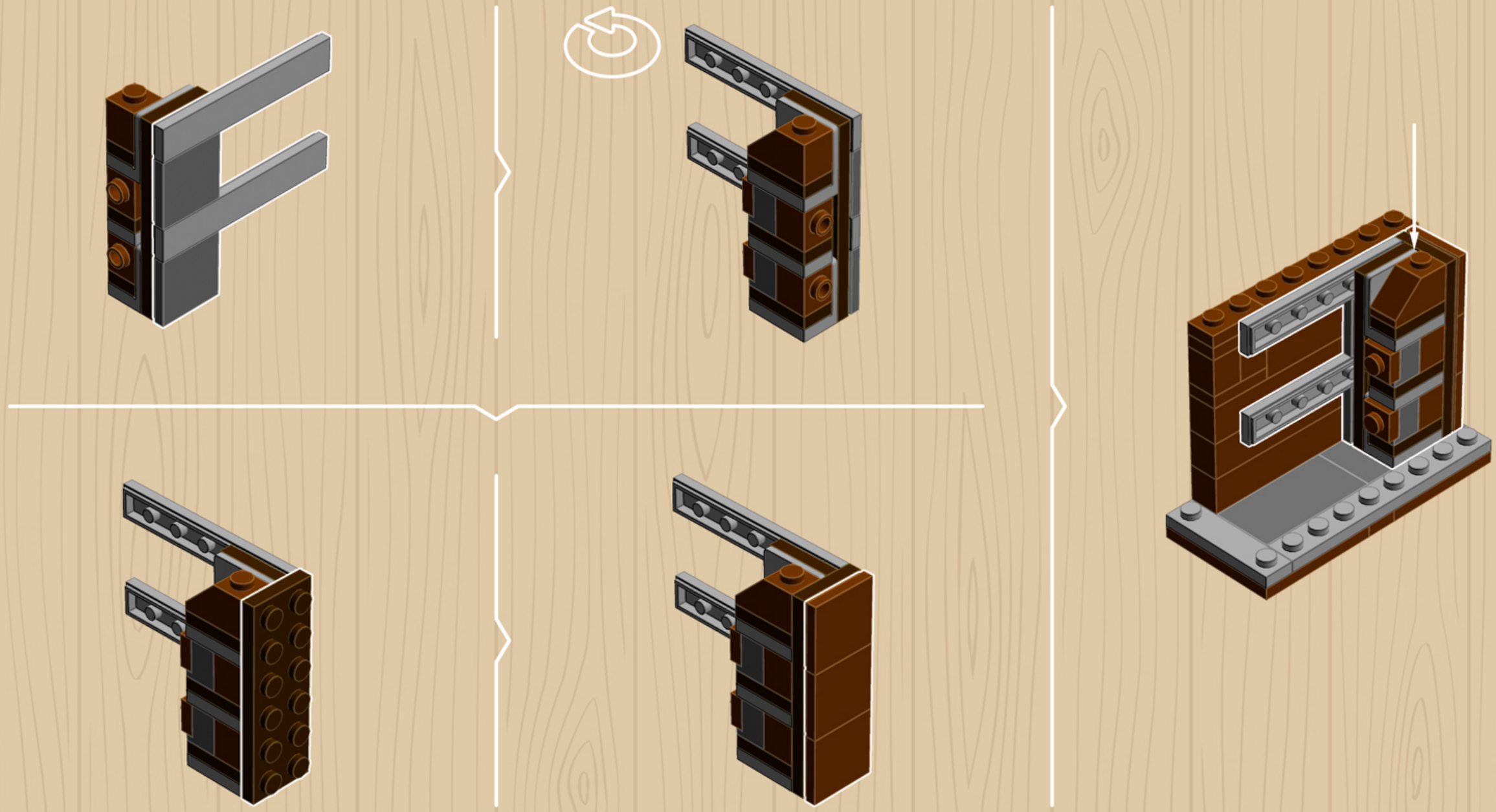

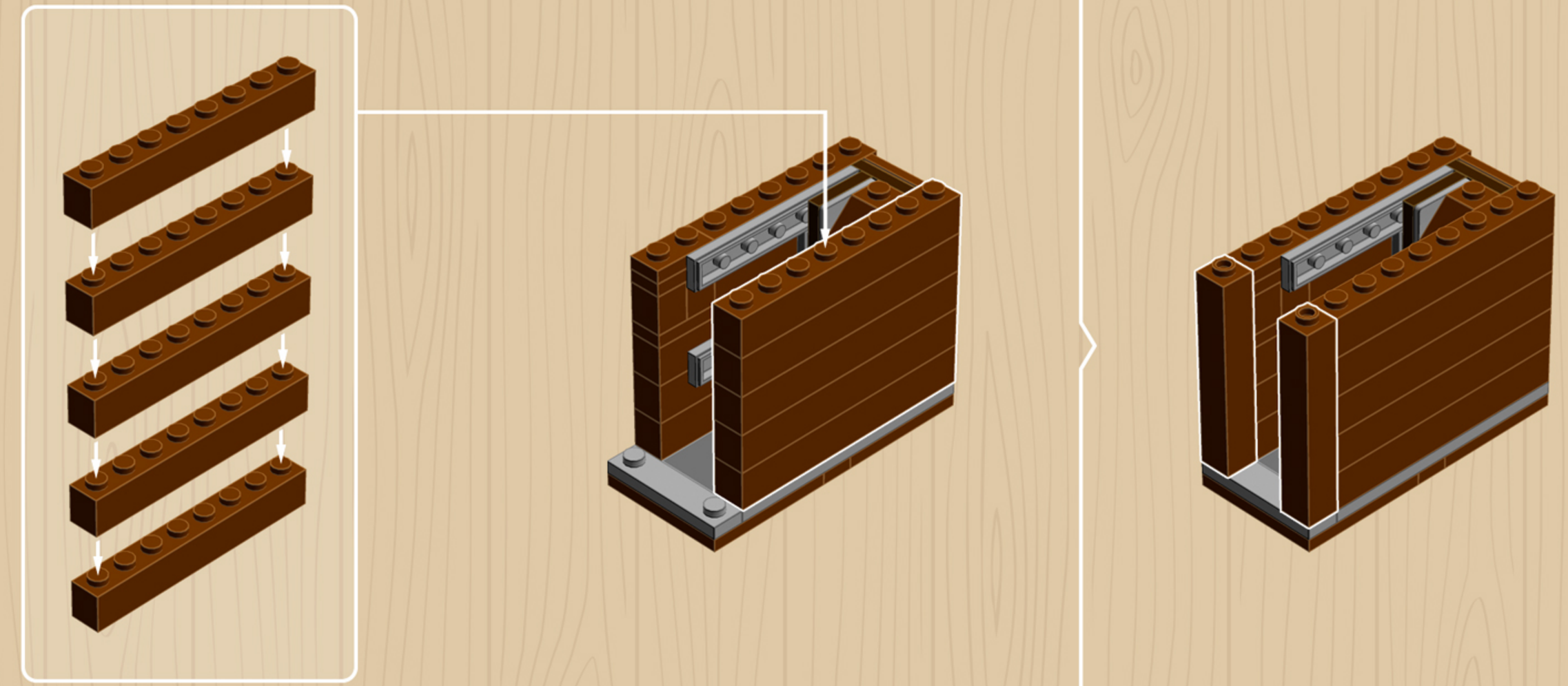

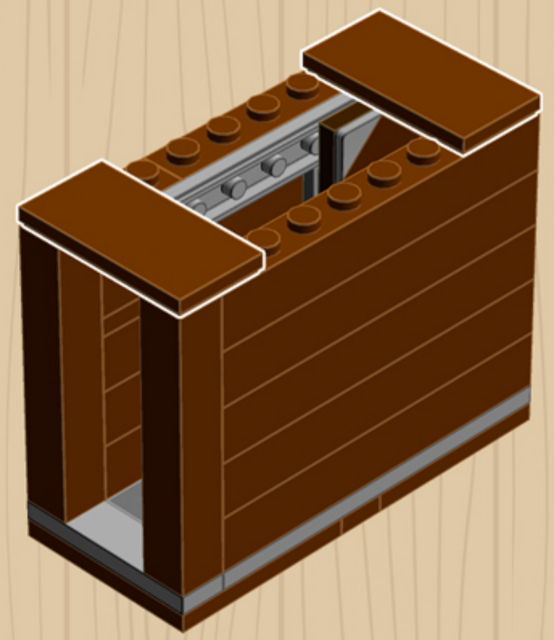

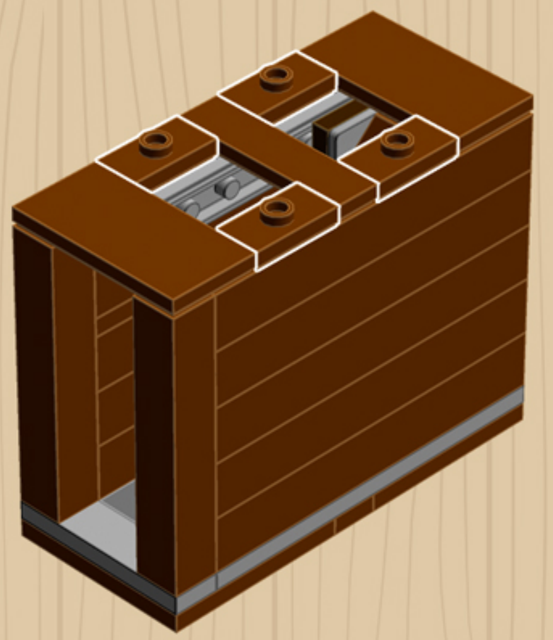

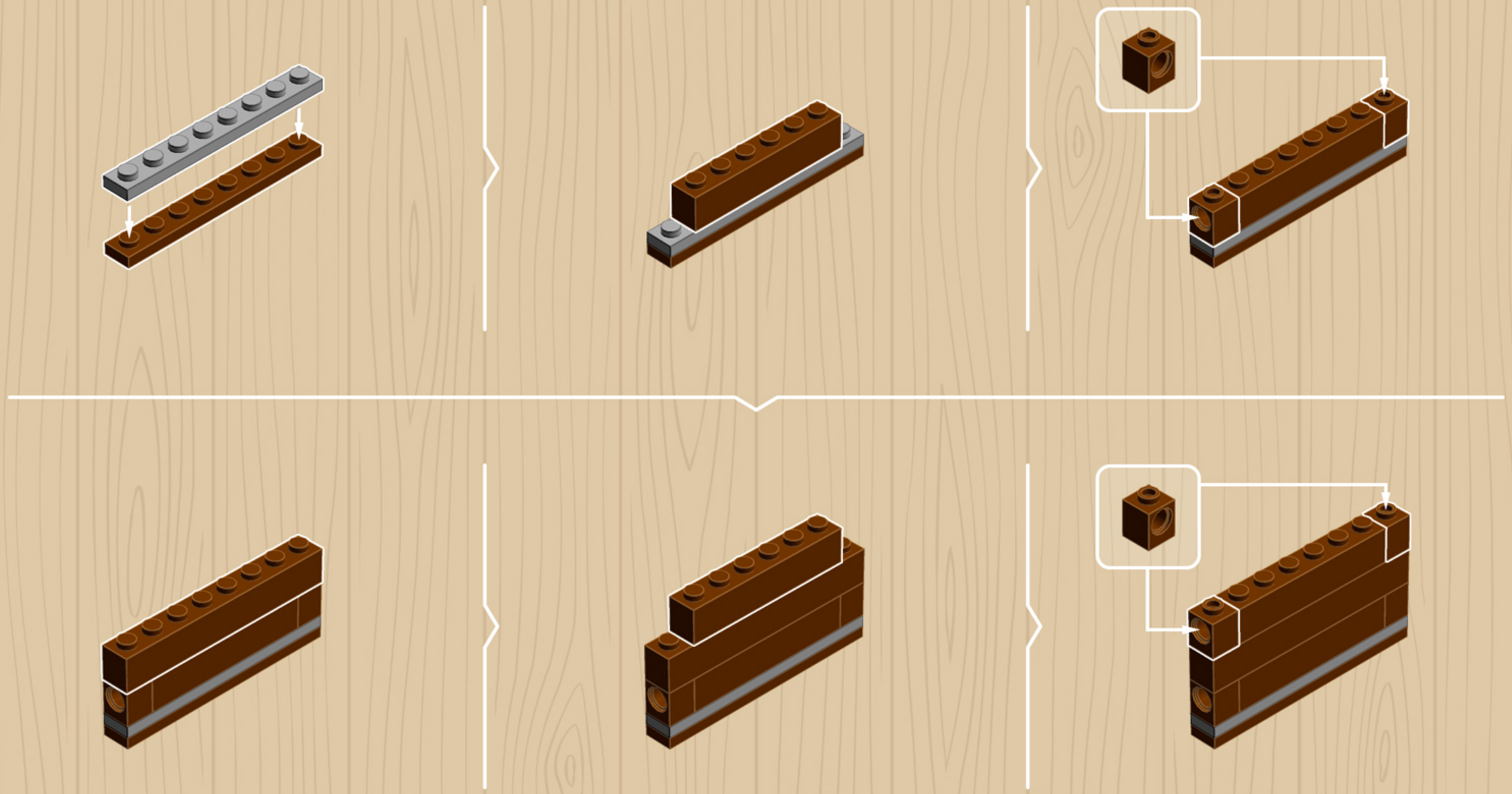

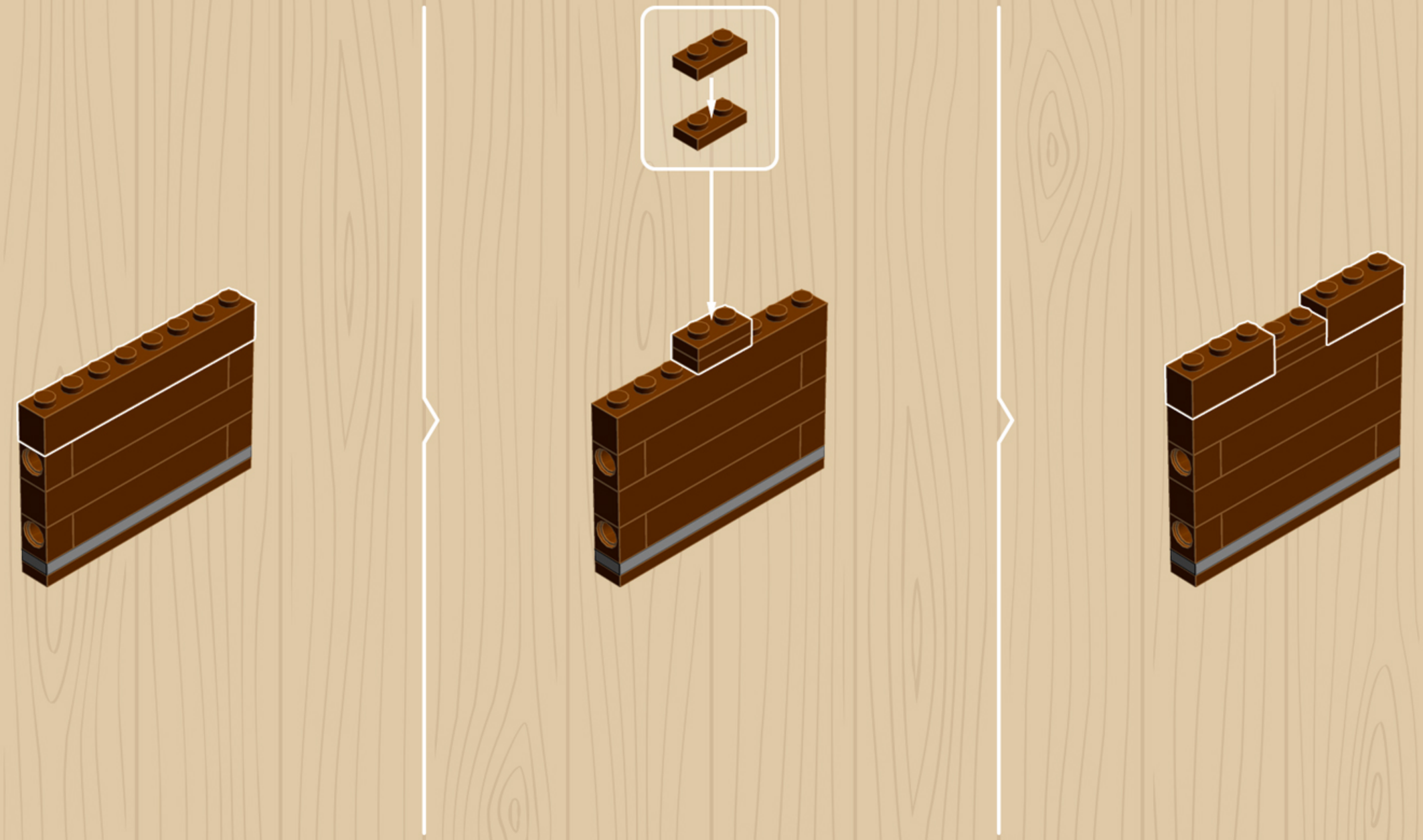

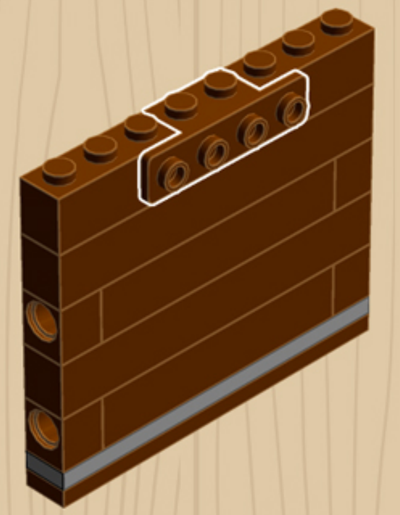

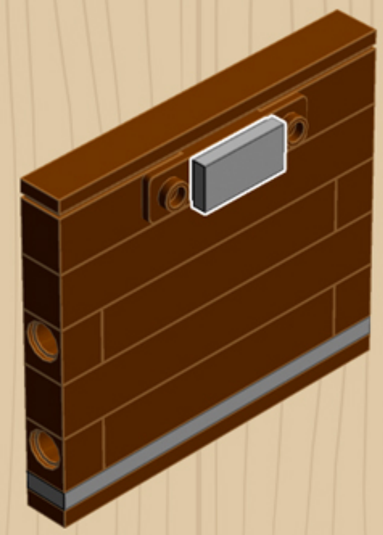

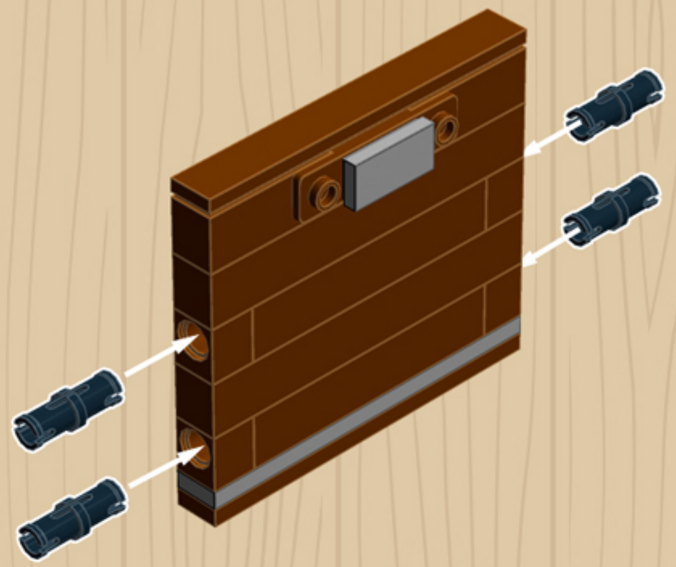

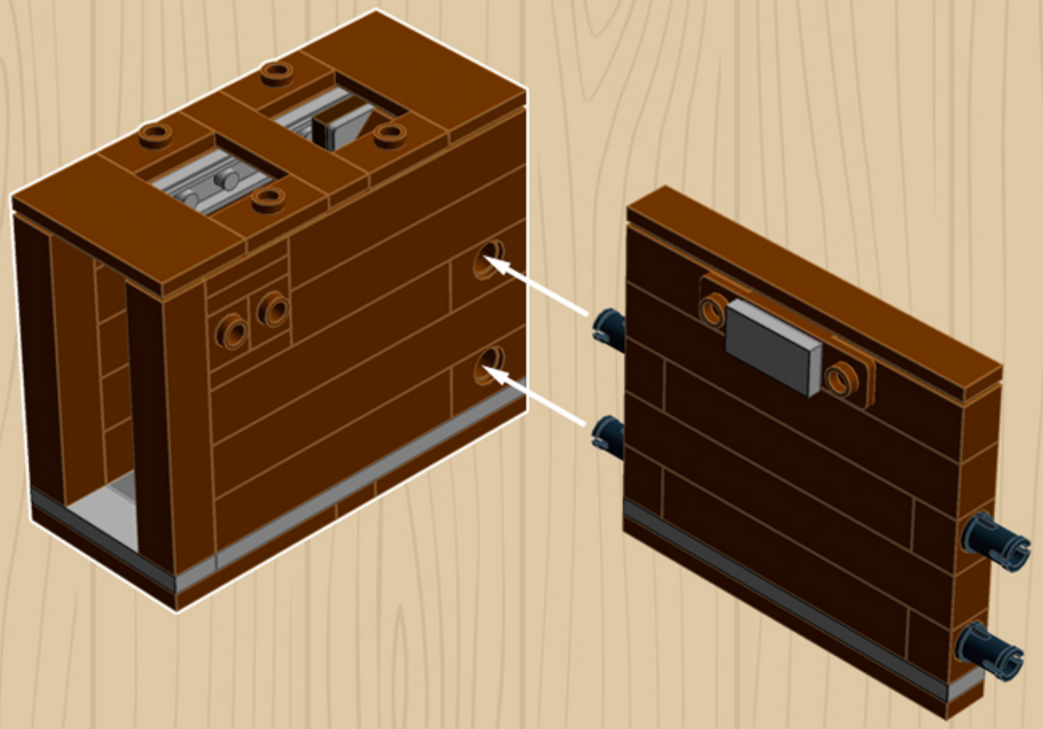

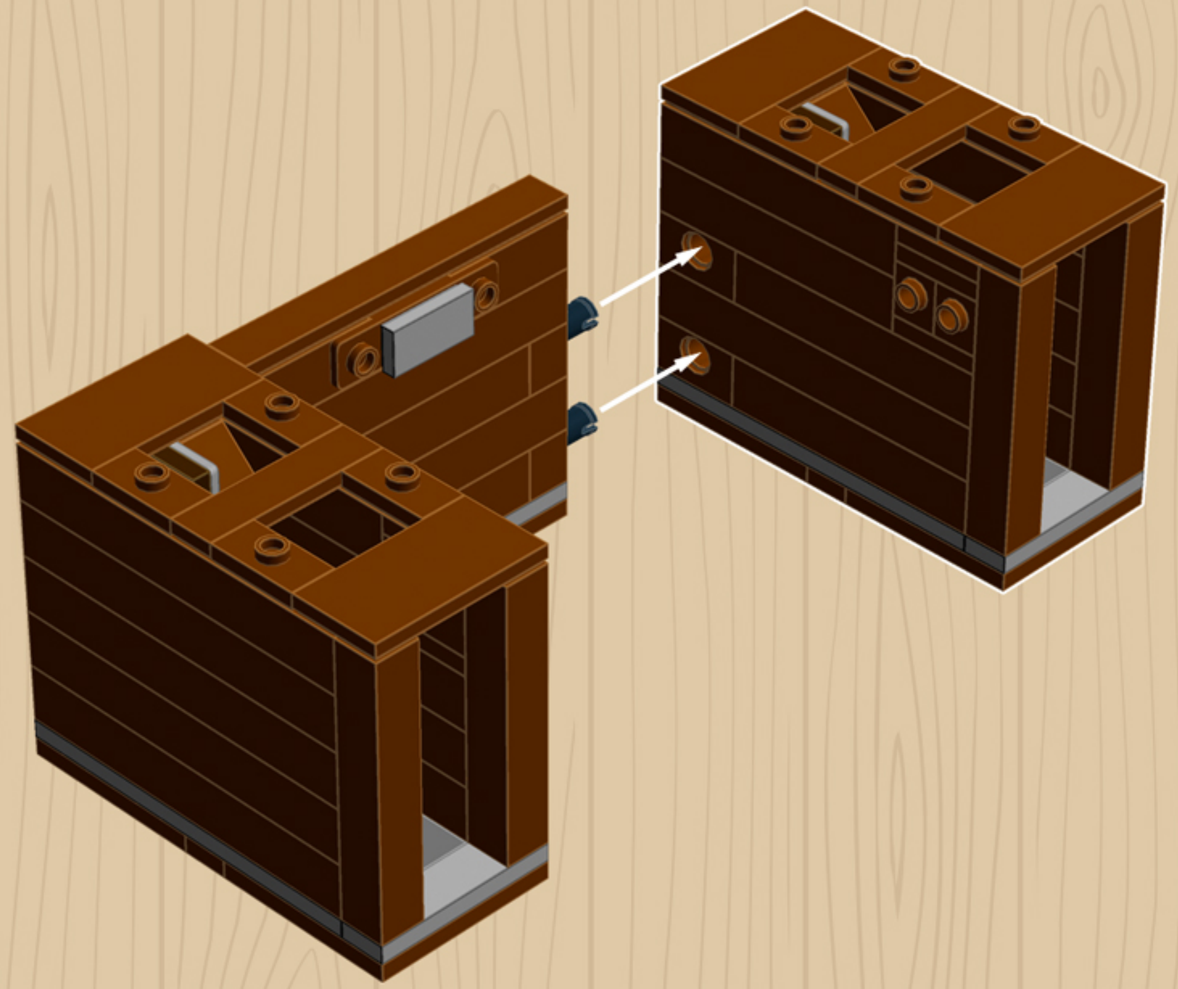

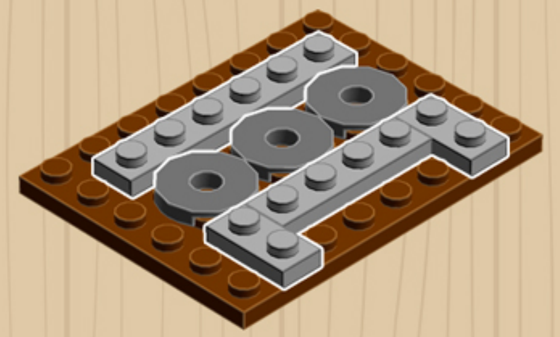

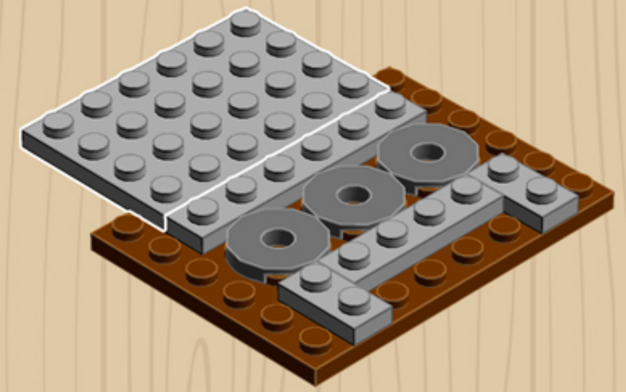

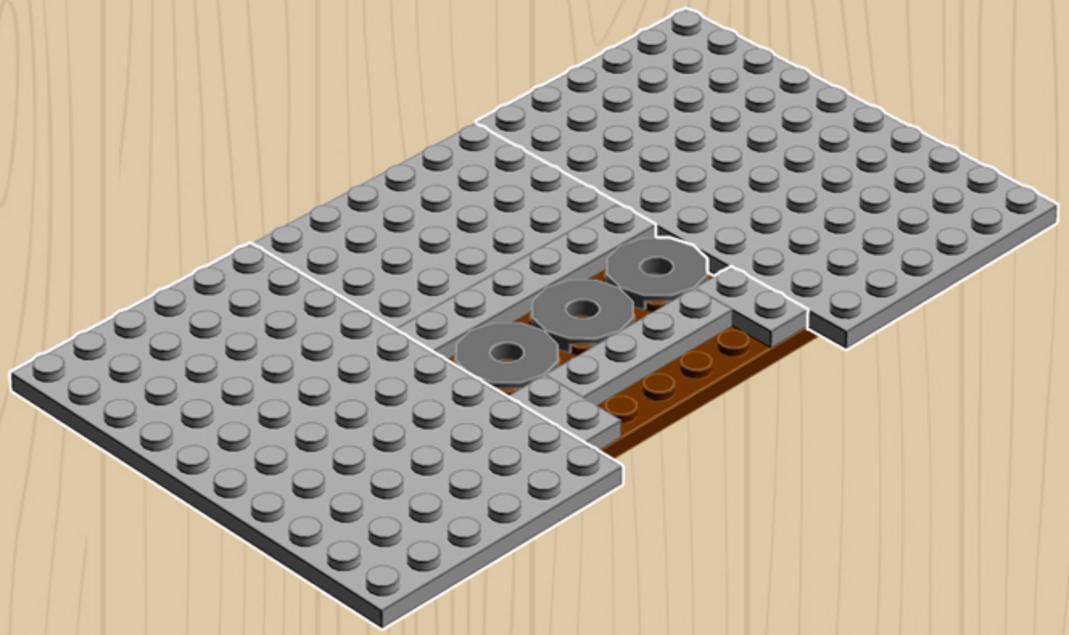

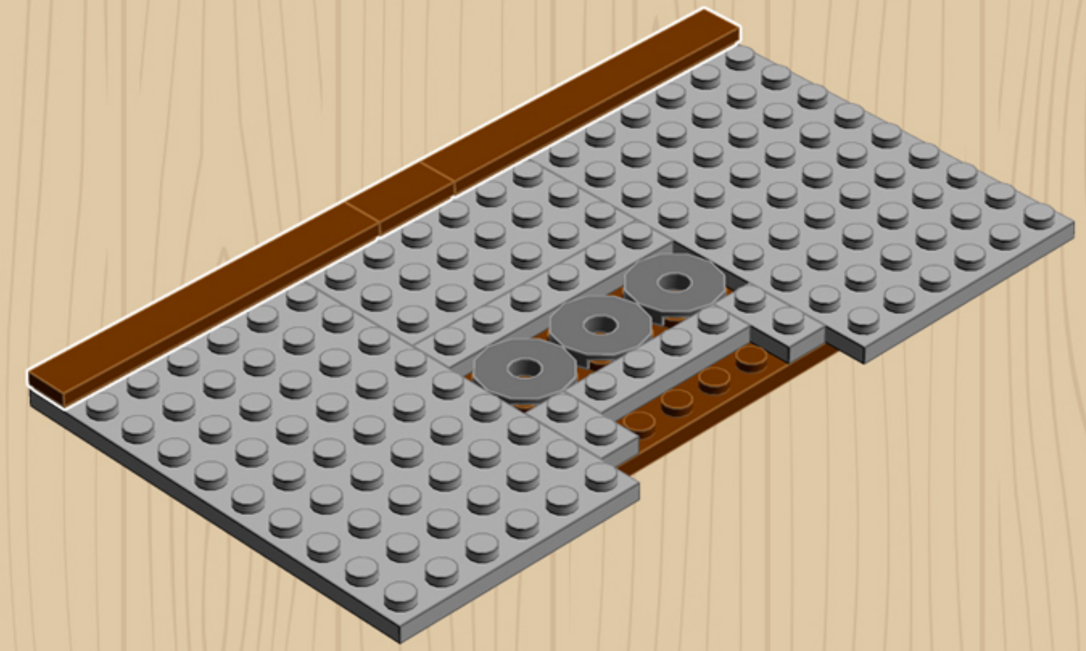

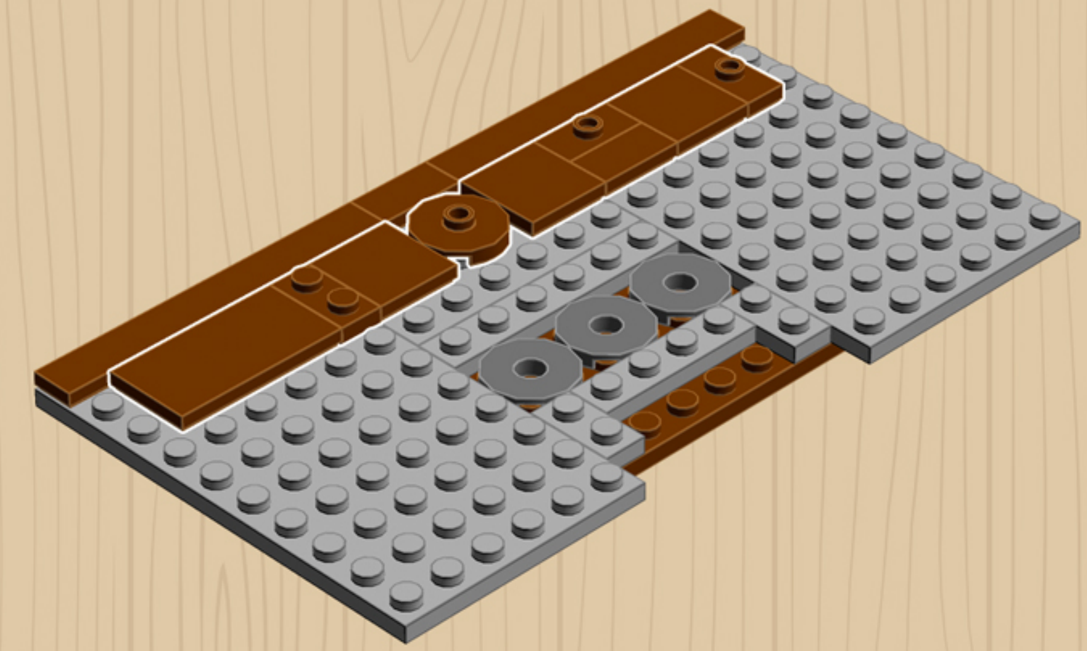

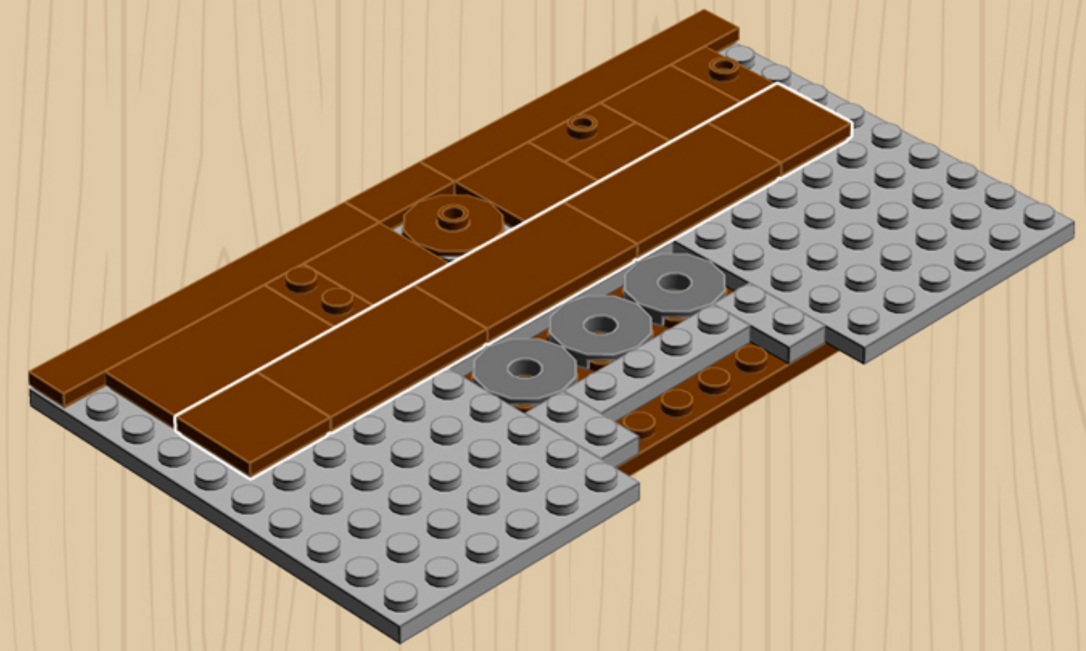

3x

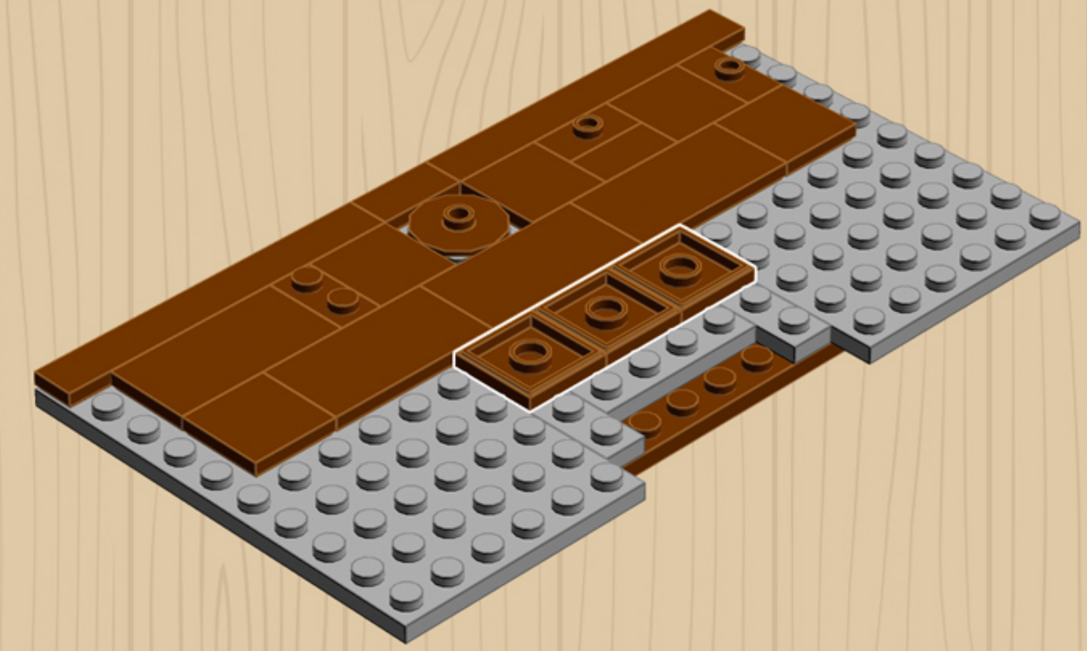

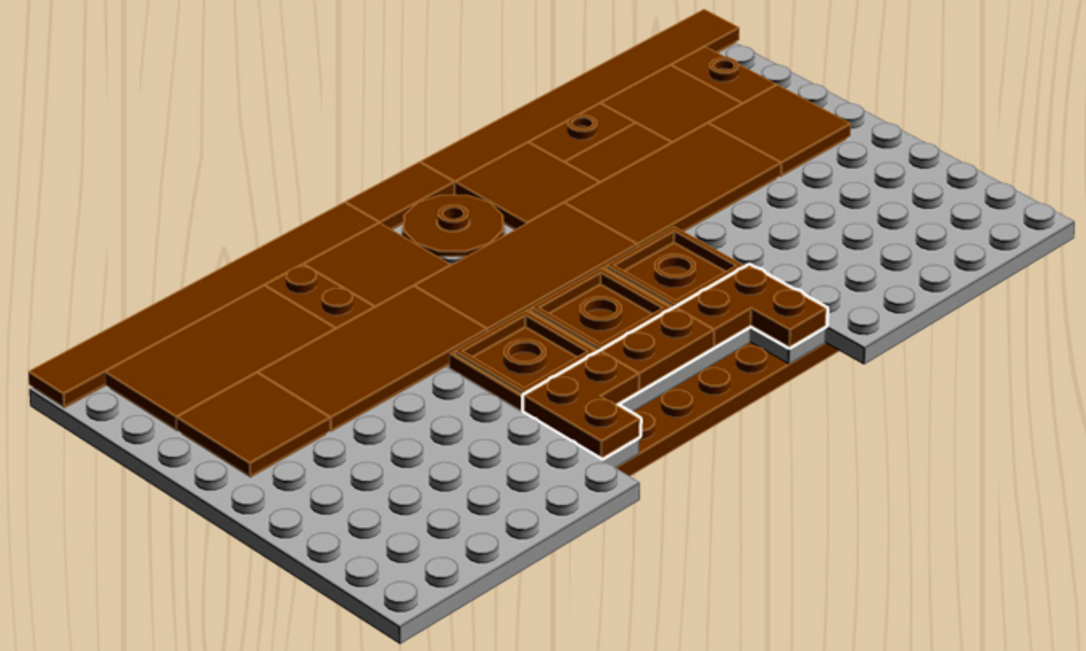

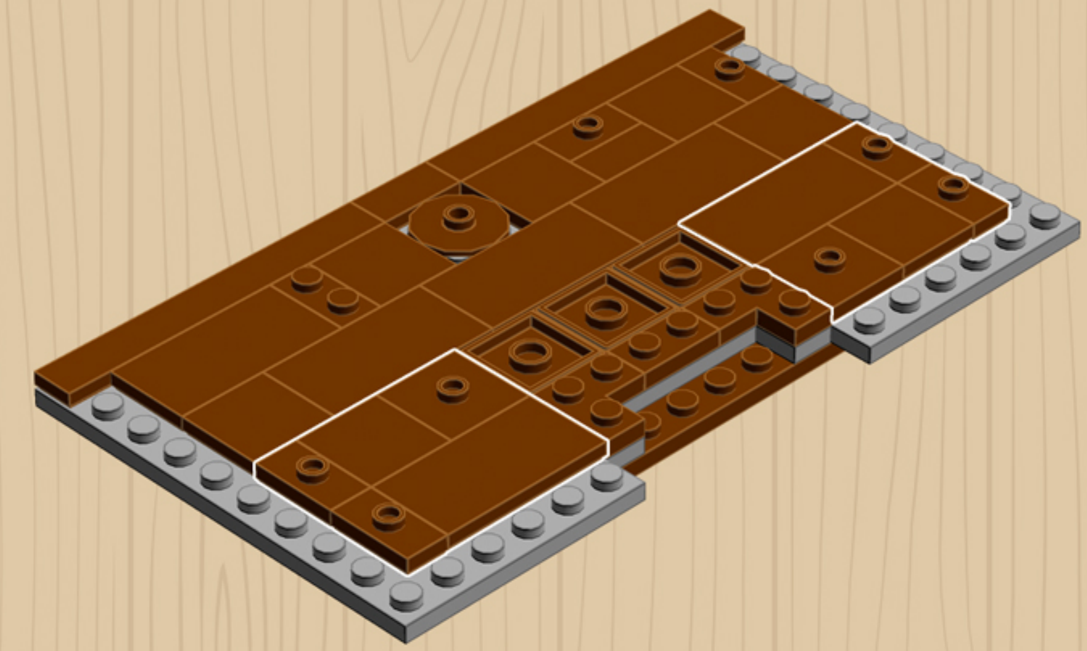

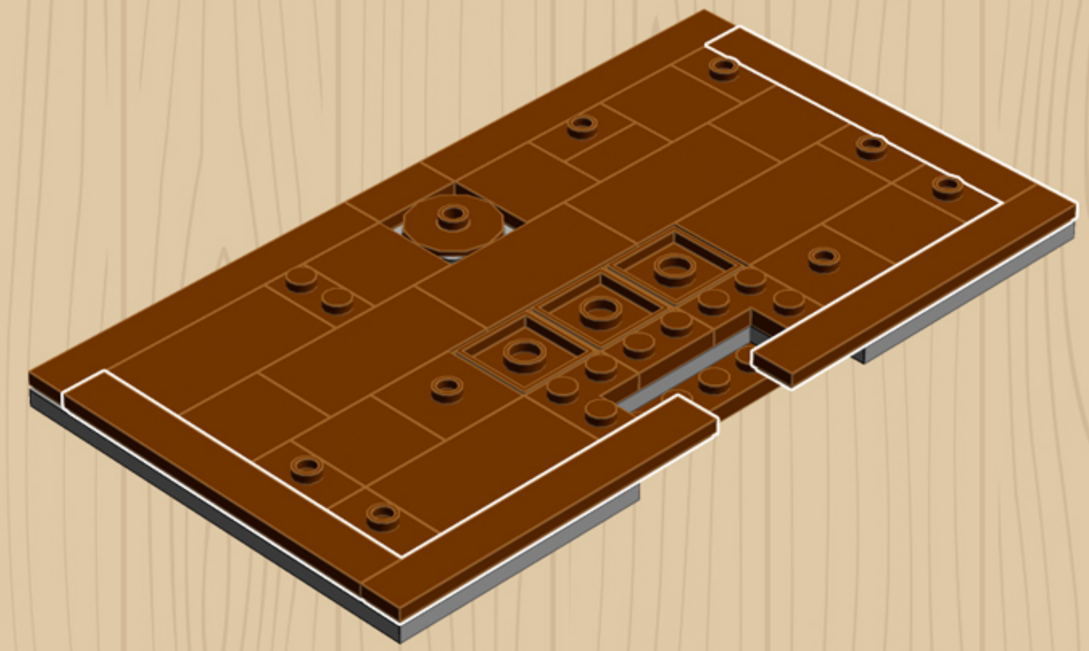

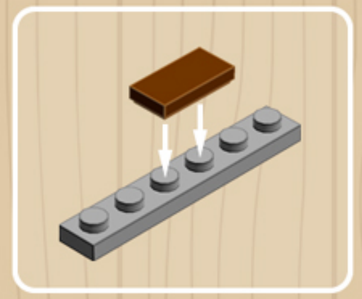

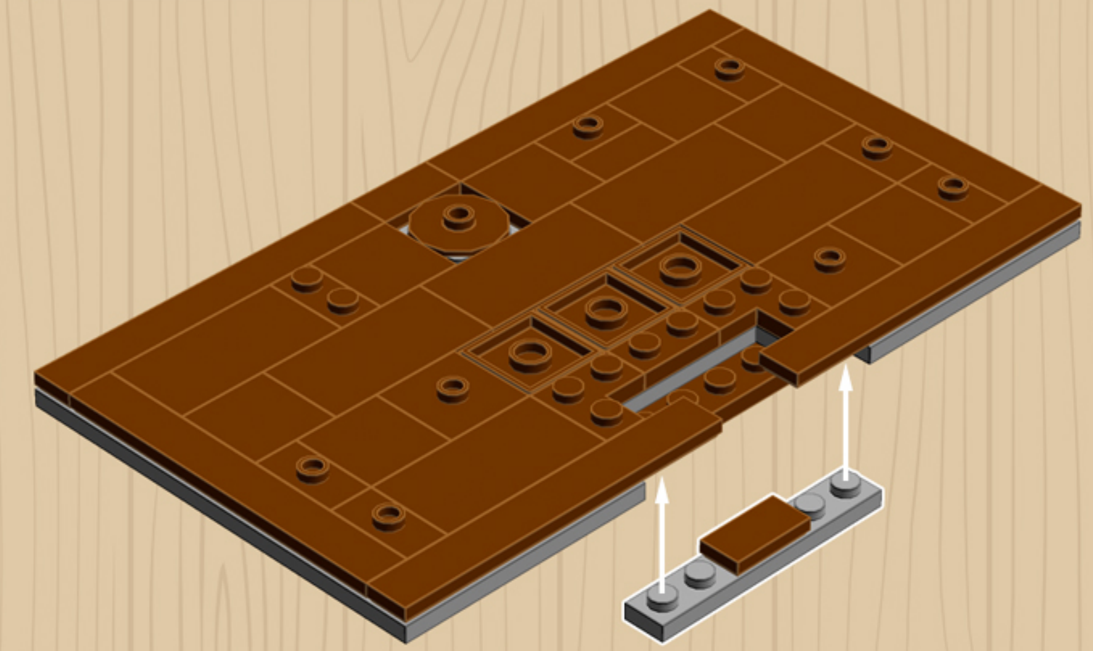

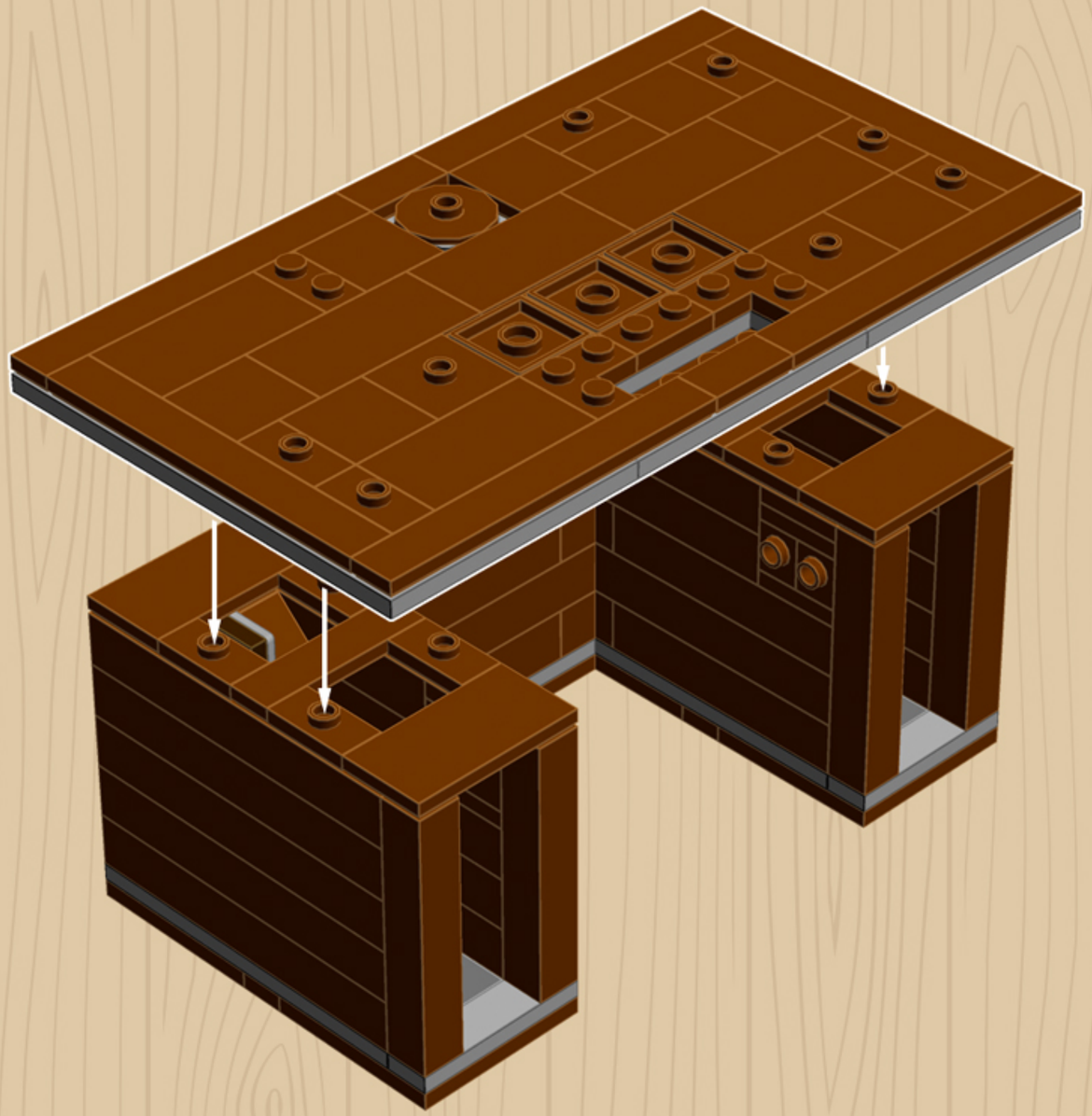

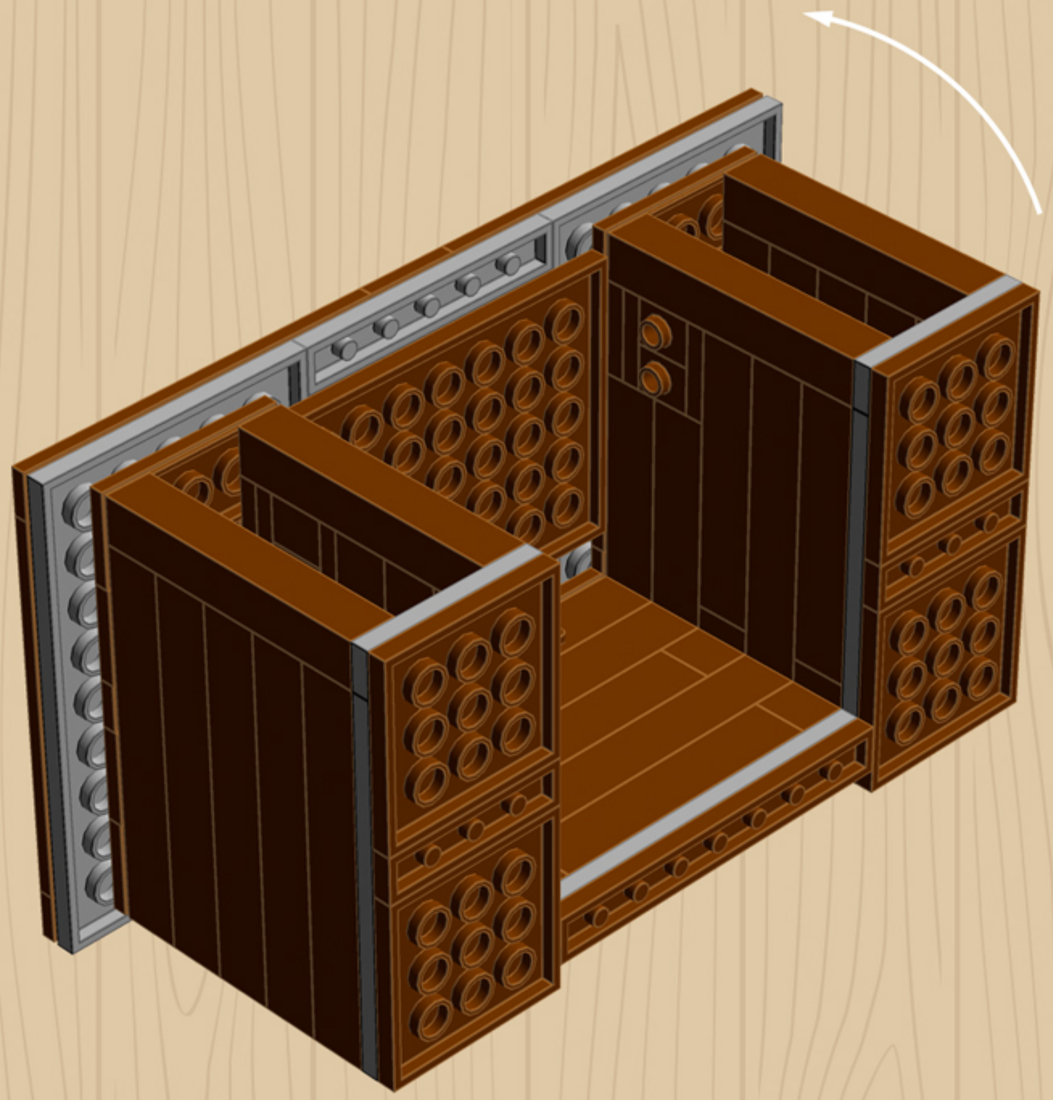

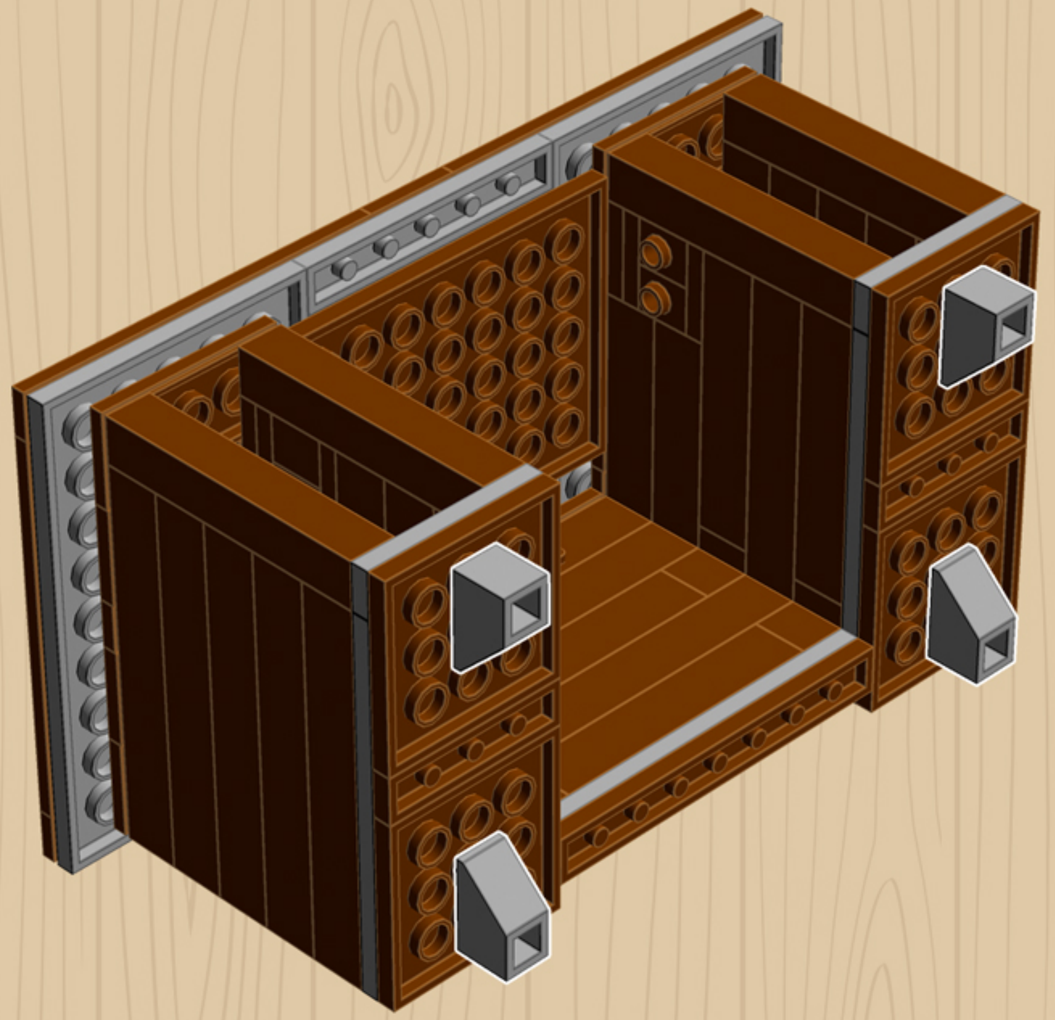

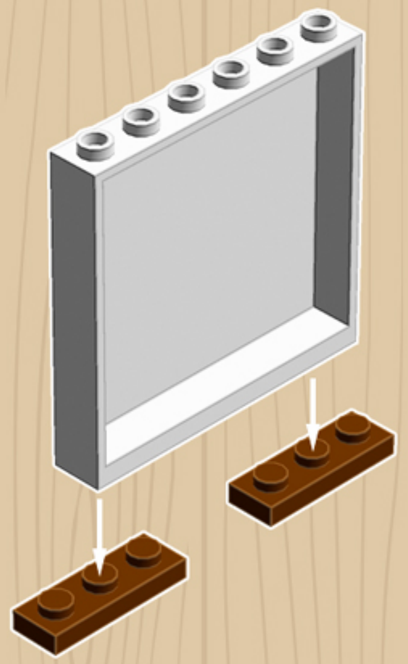

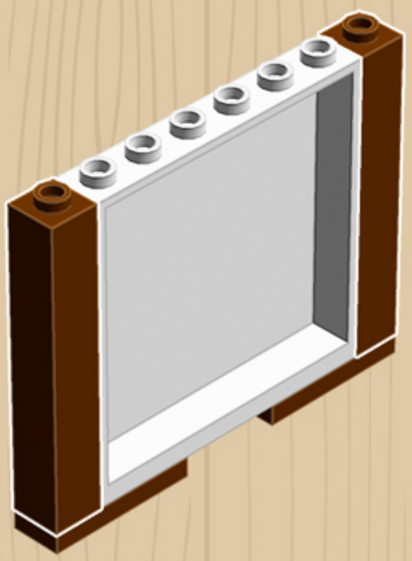

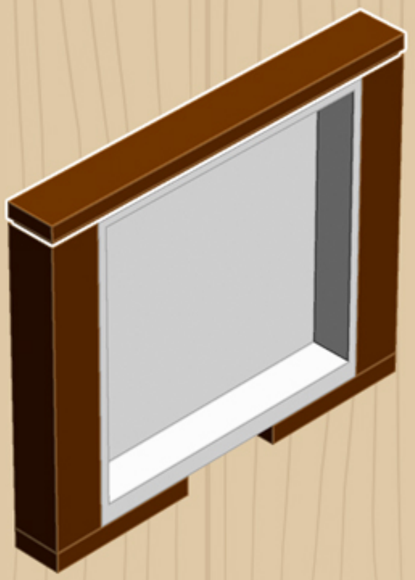

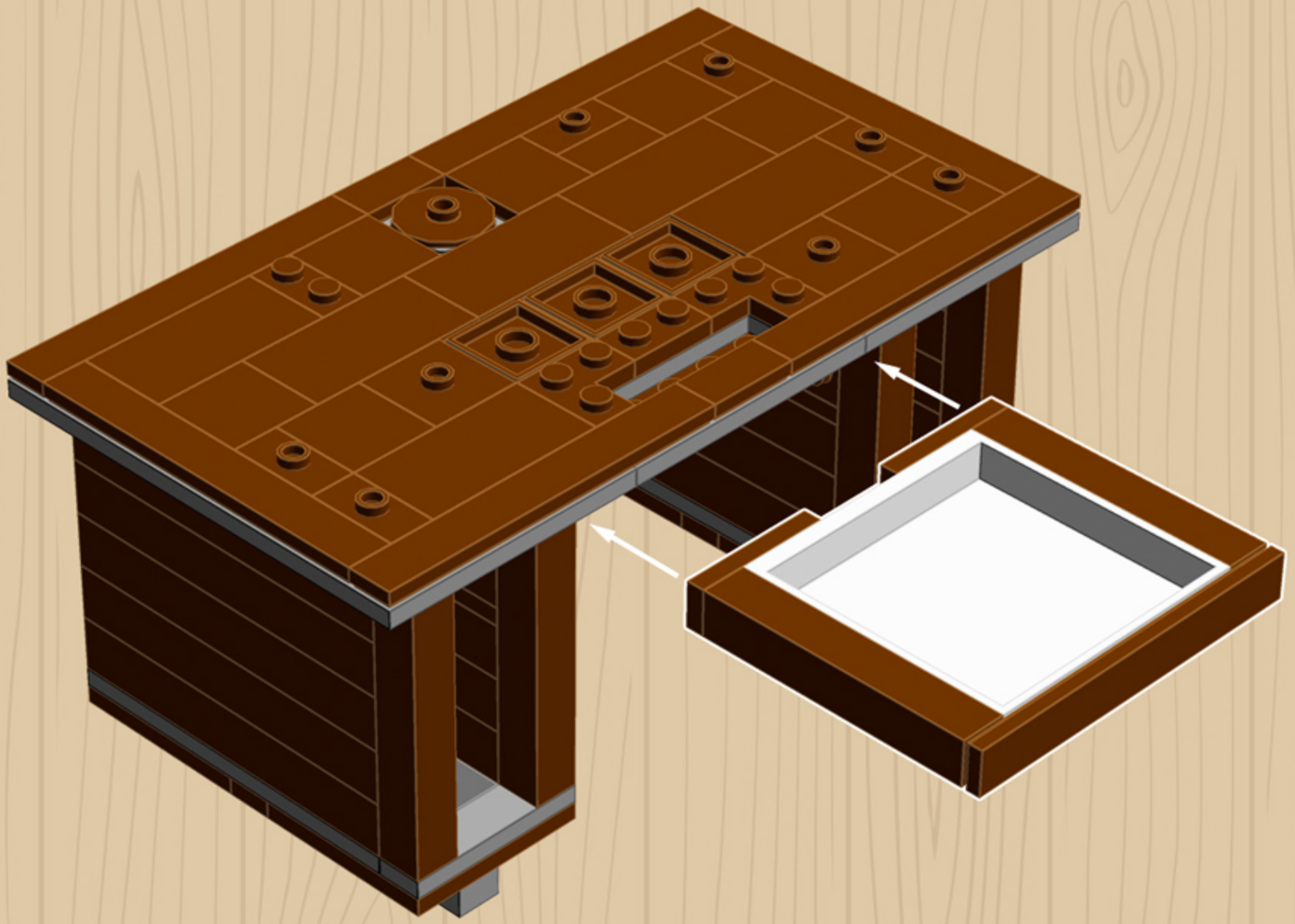

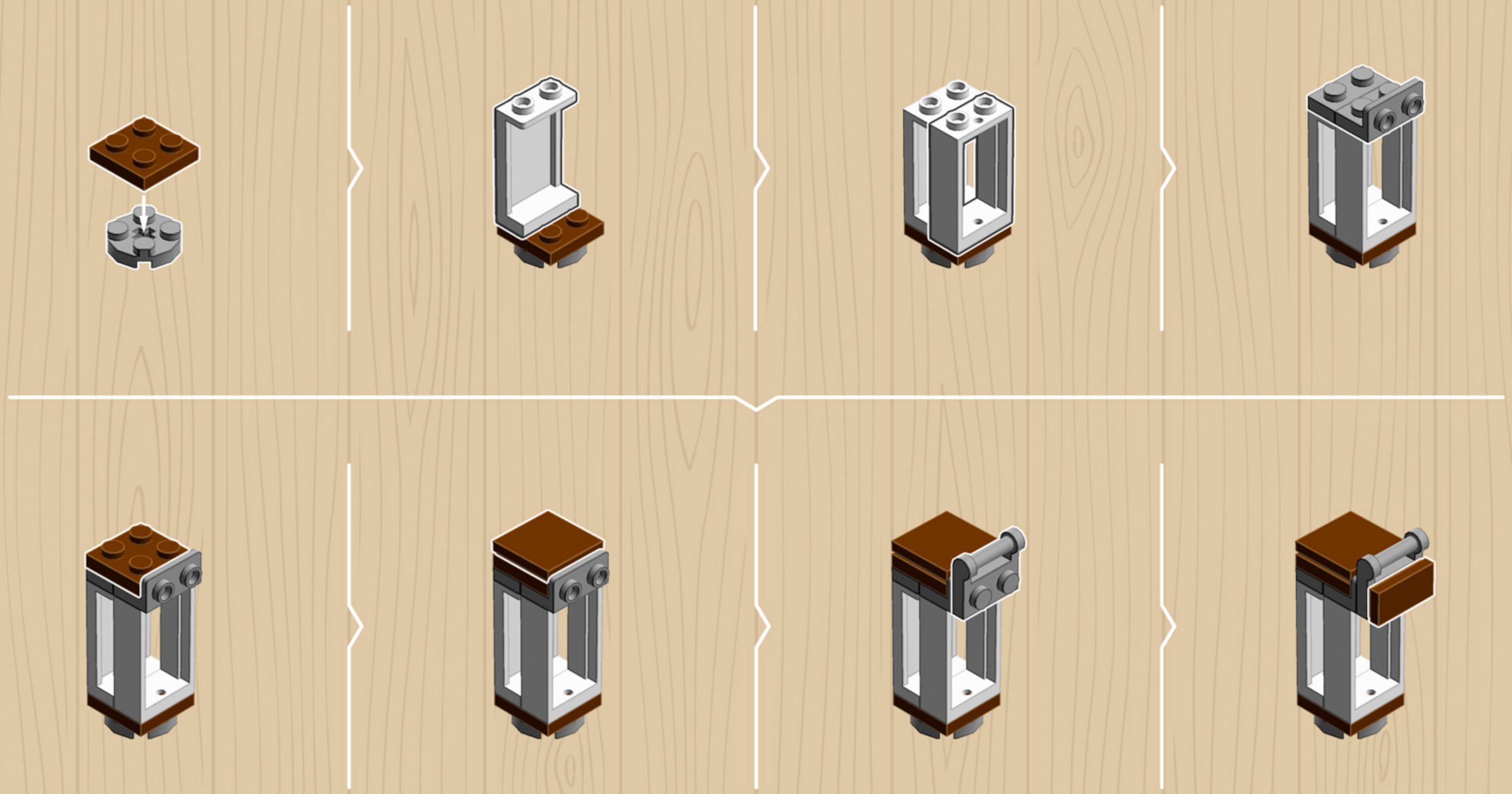

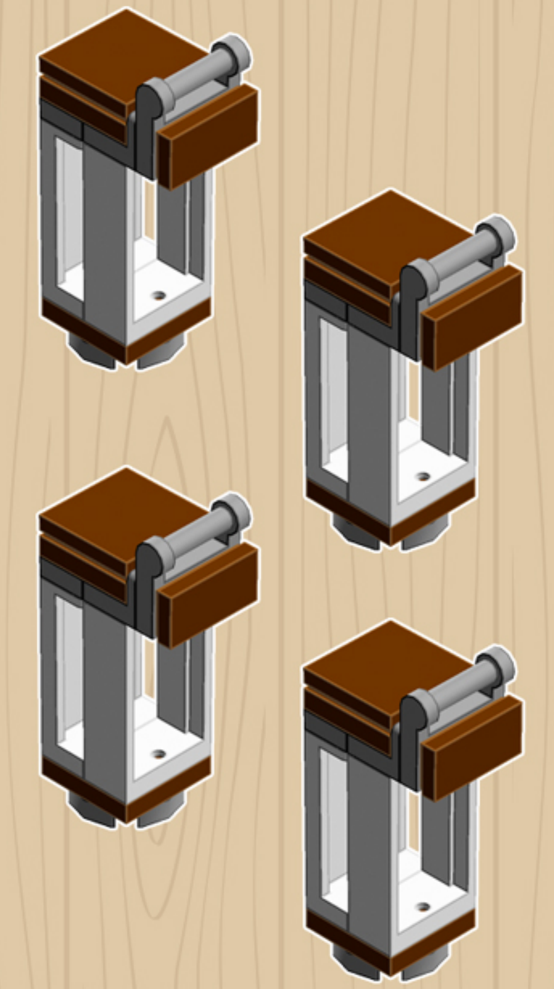

4x

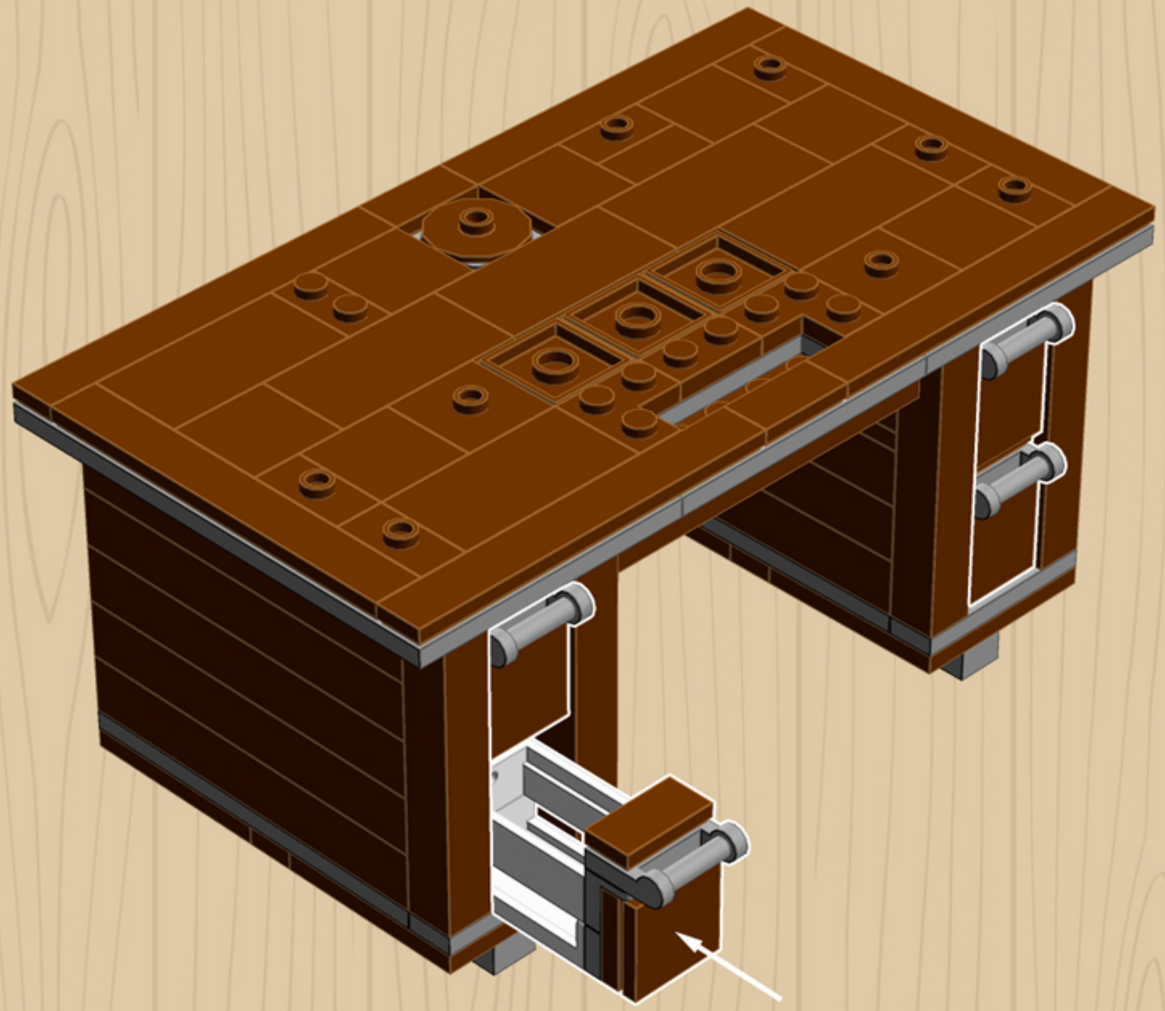

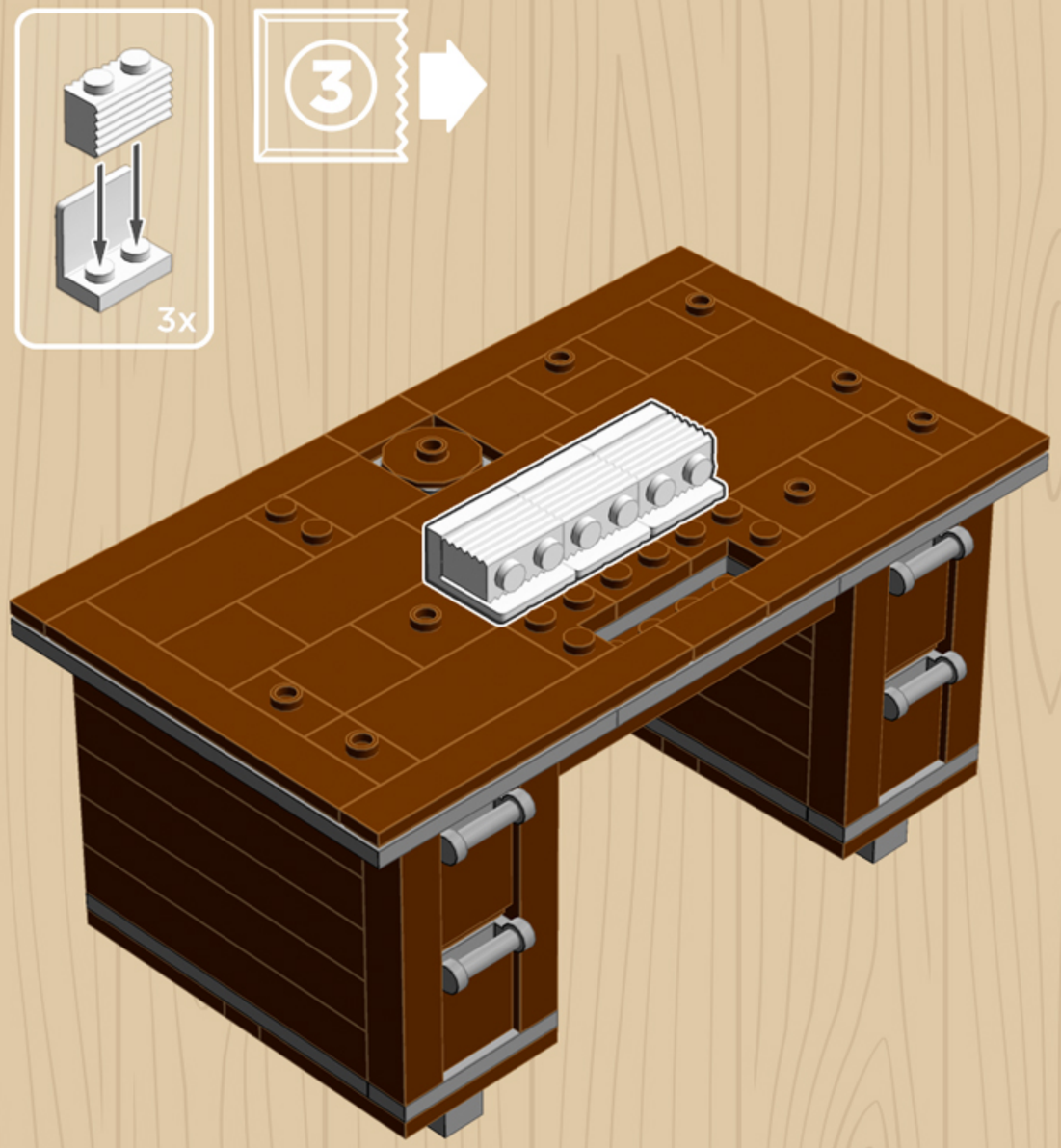
3
3x

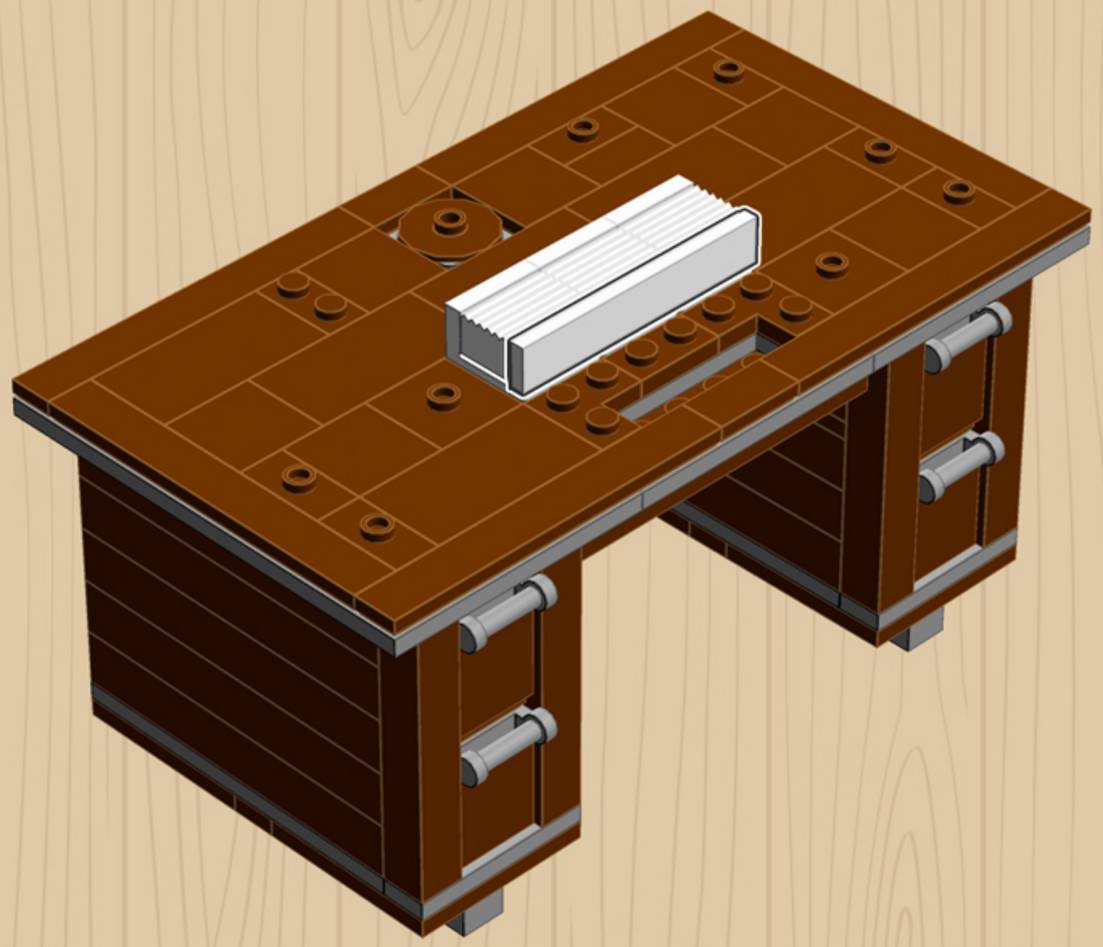

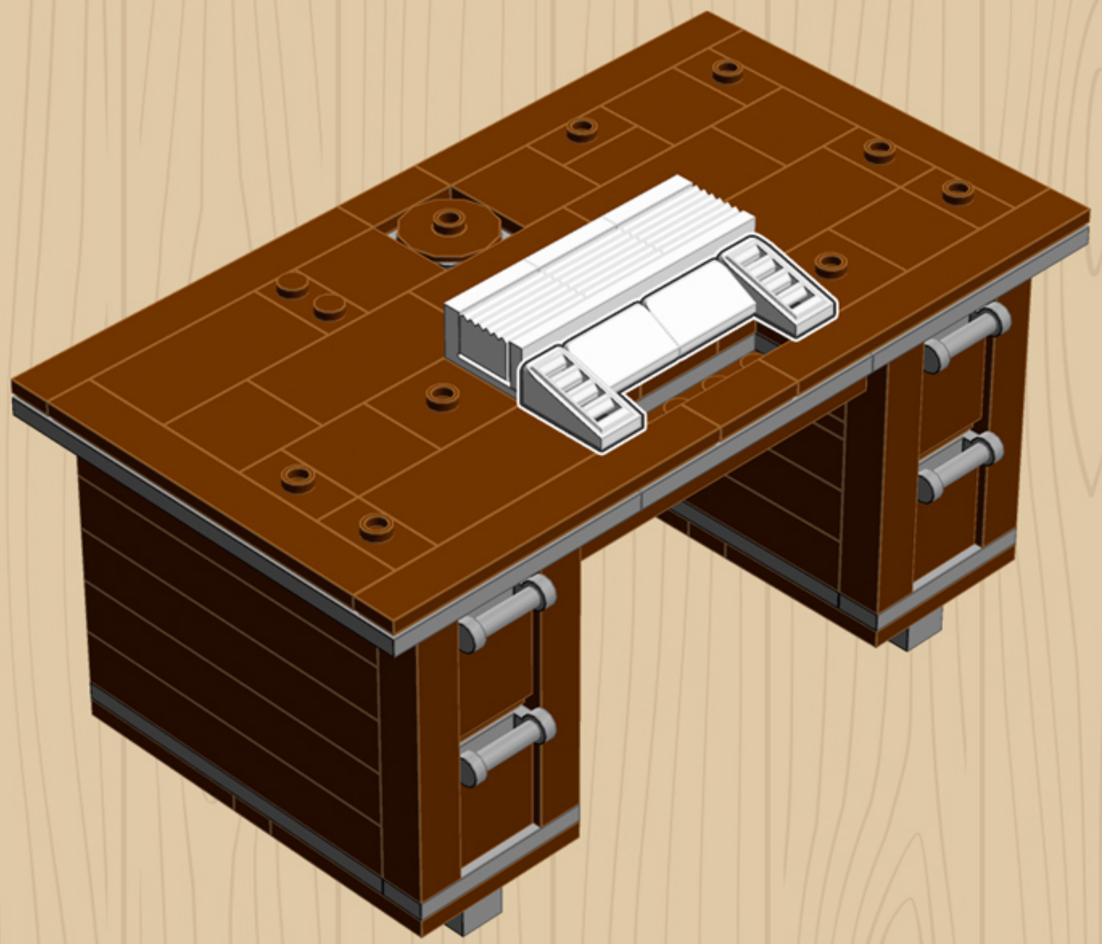

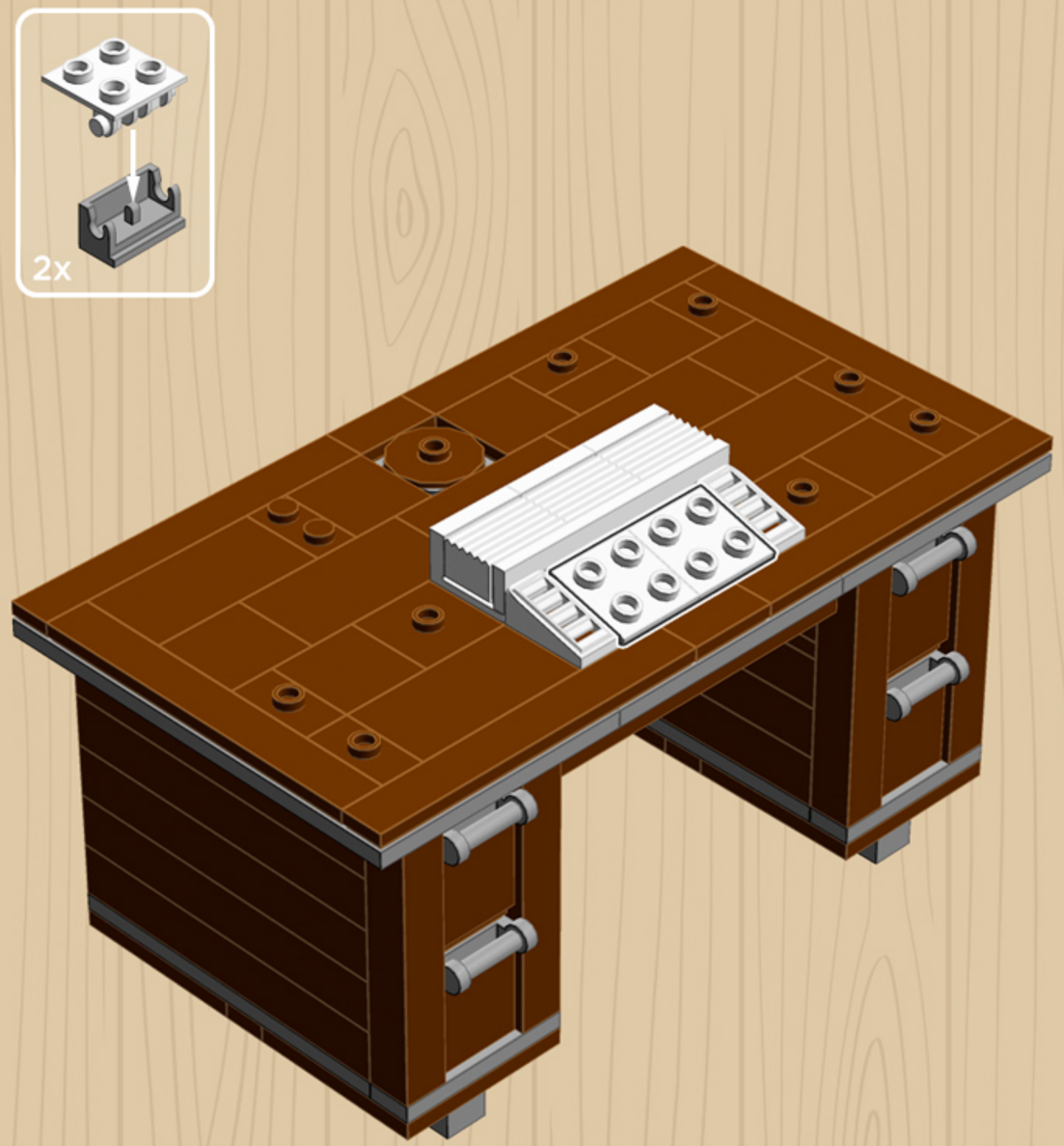
2x

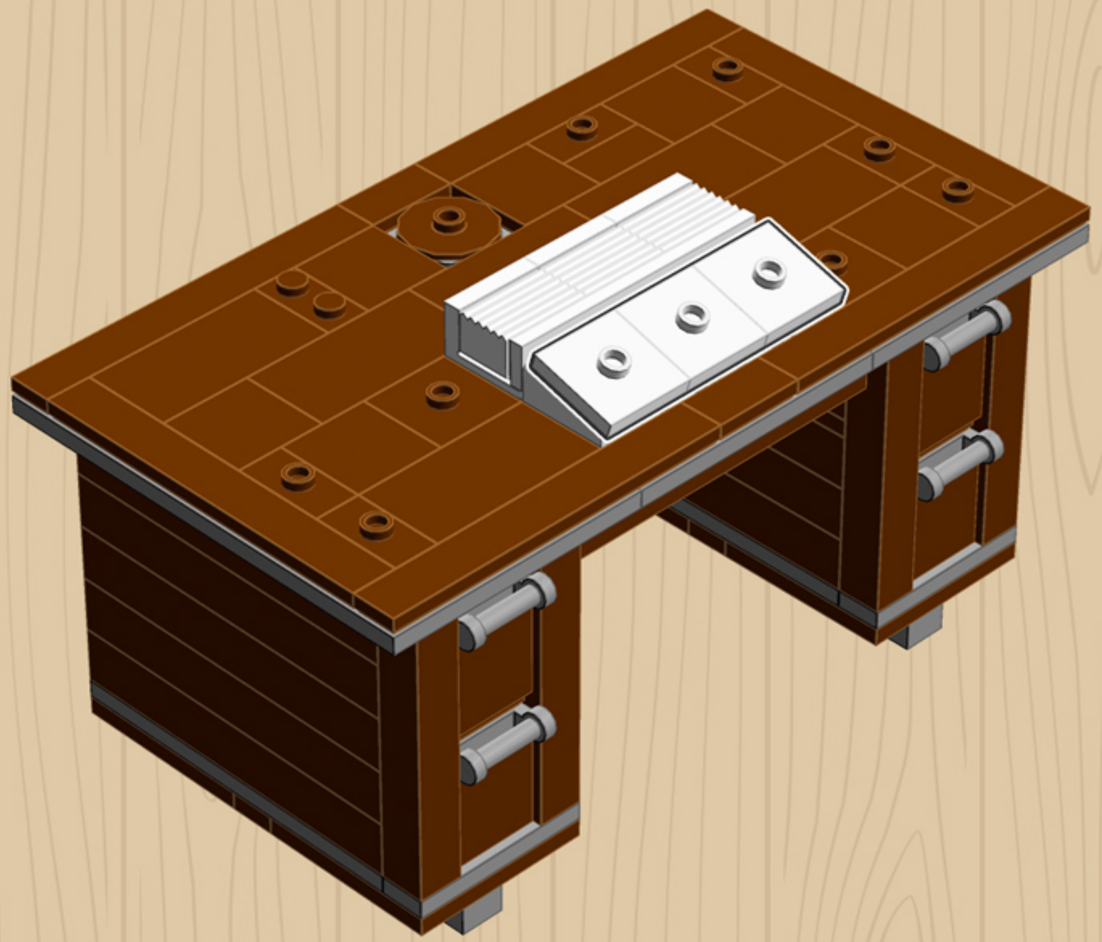

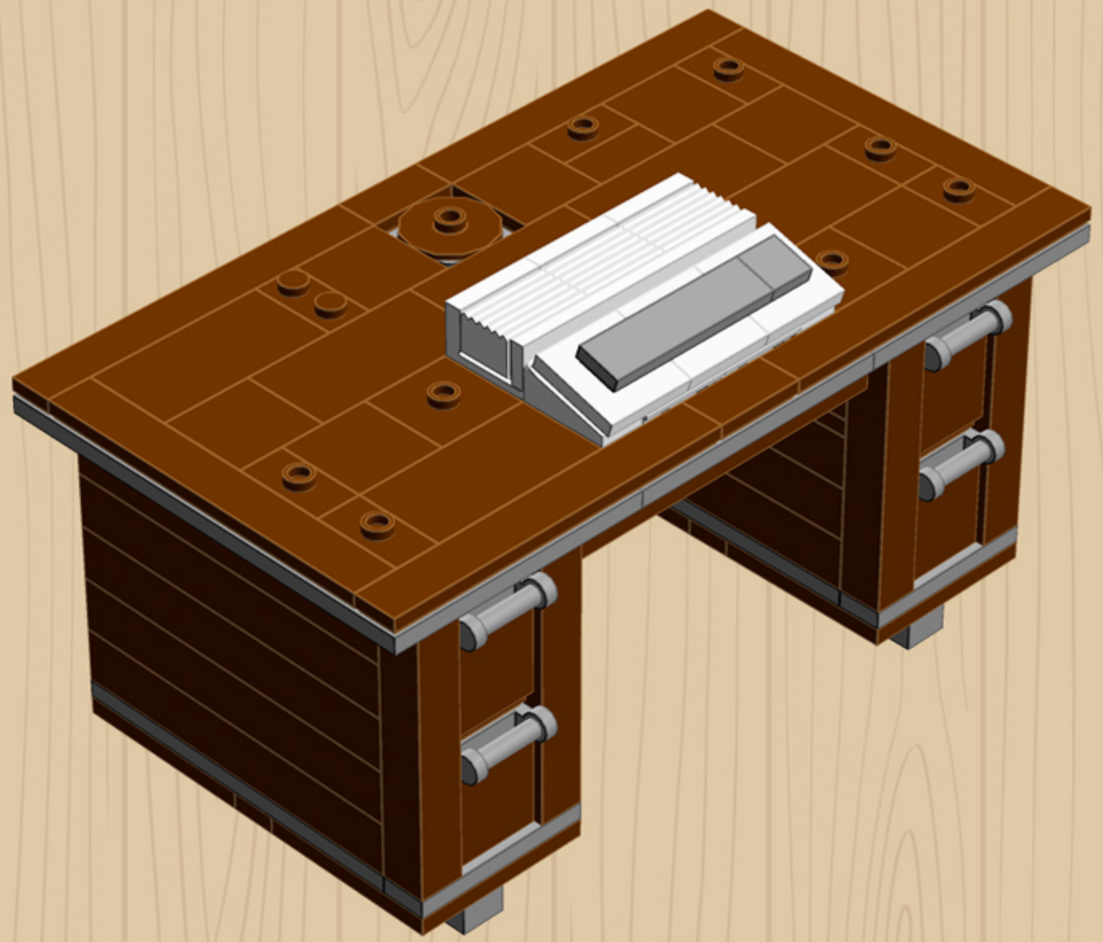

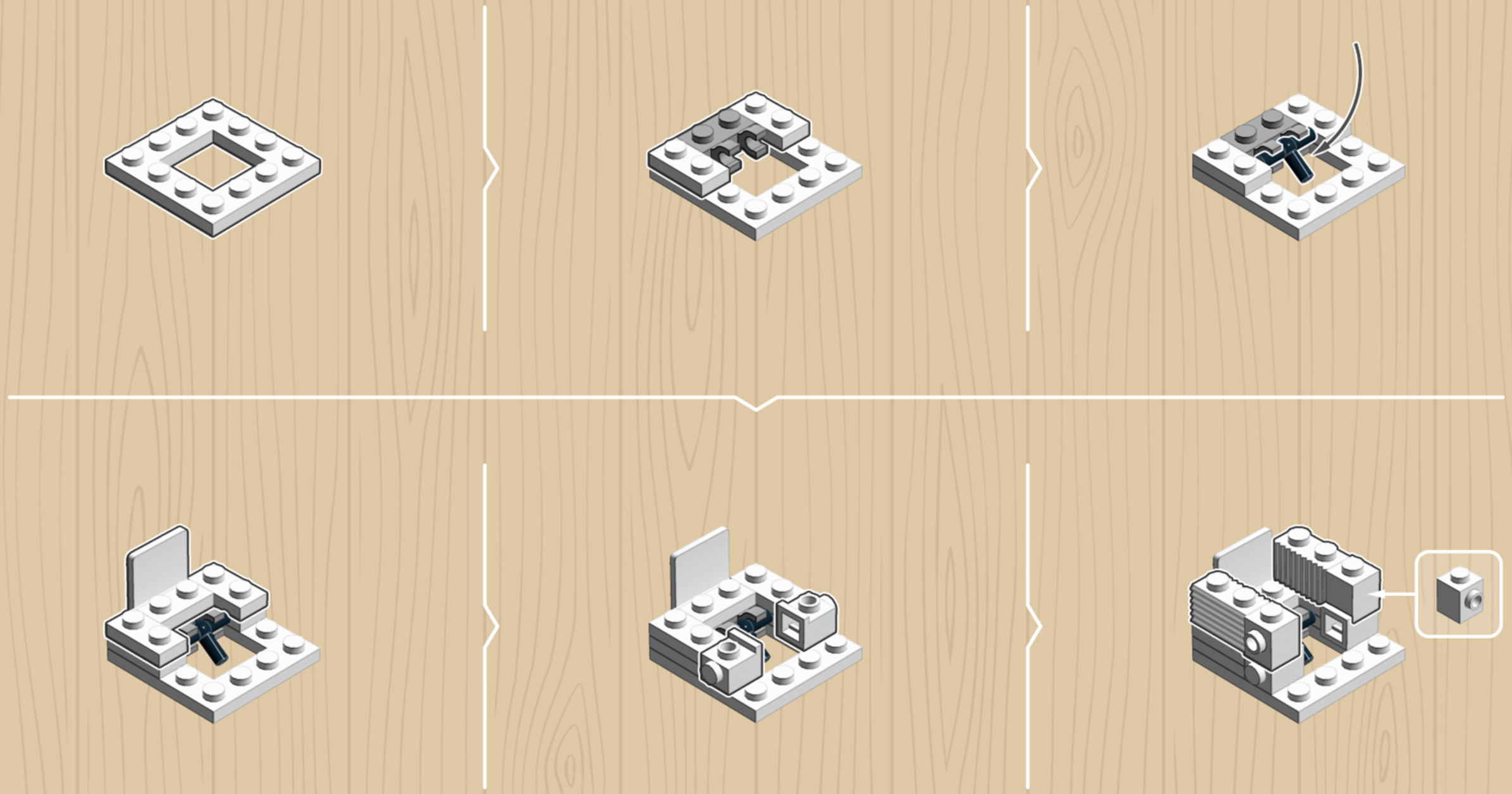

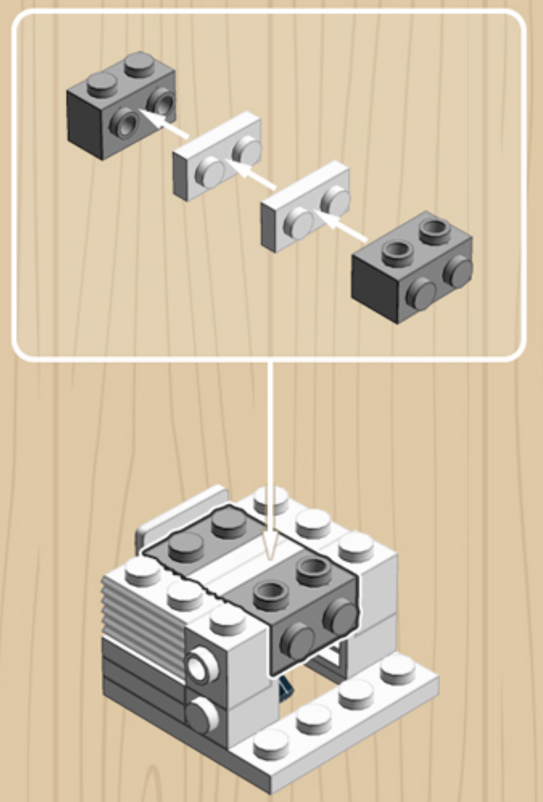

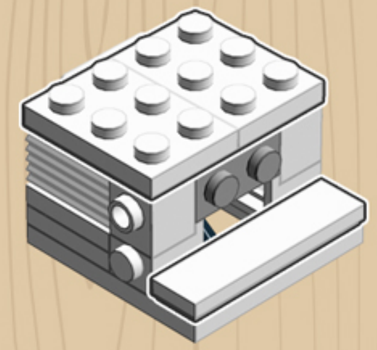

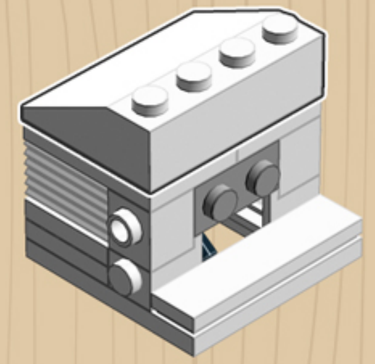

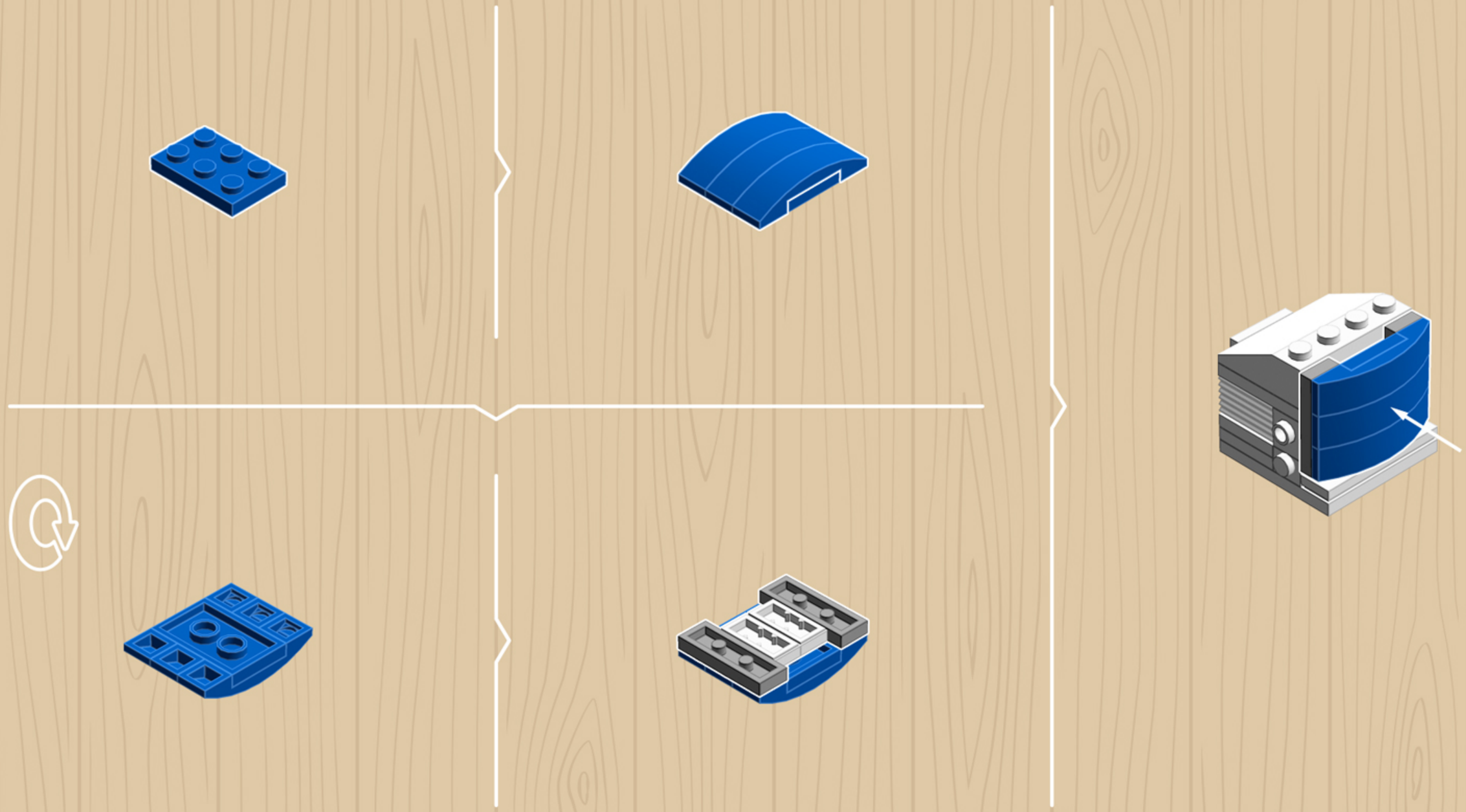

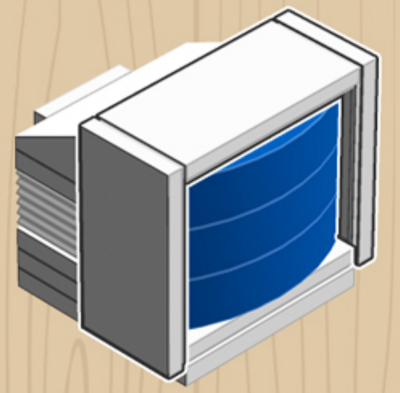

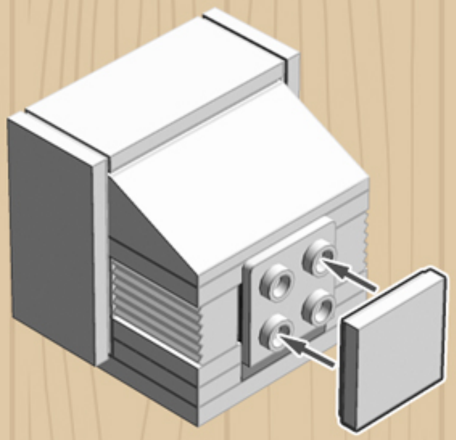

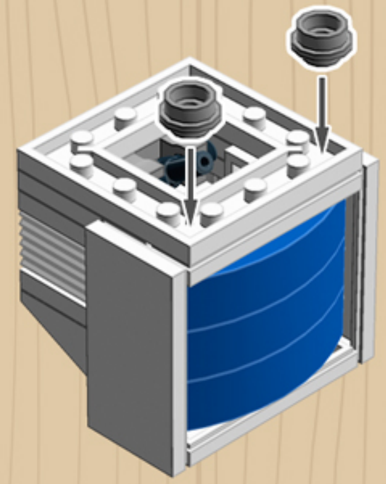

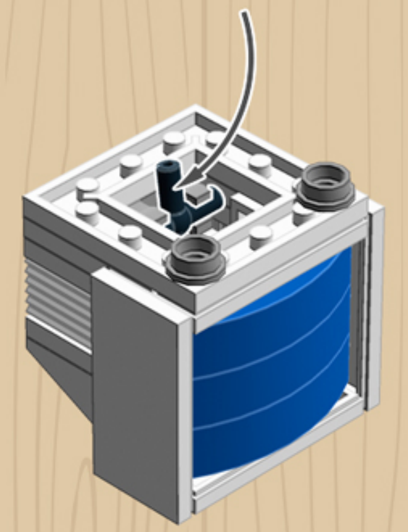

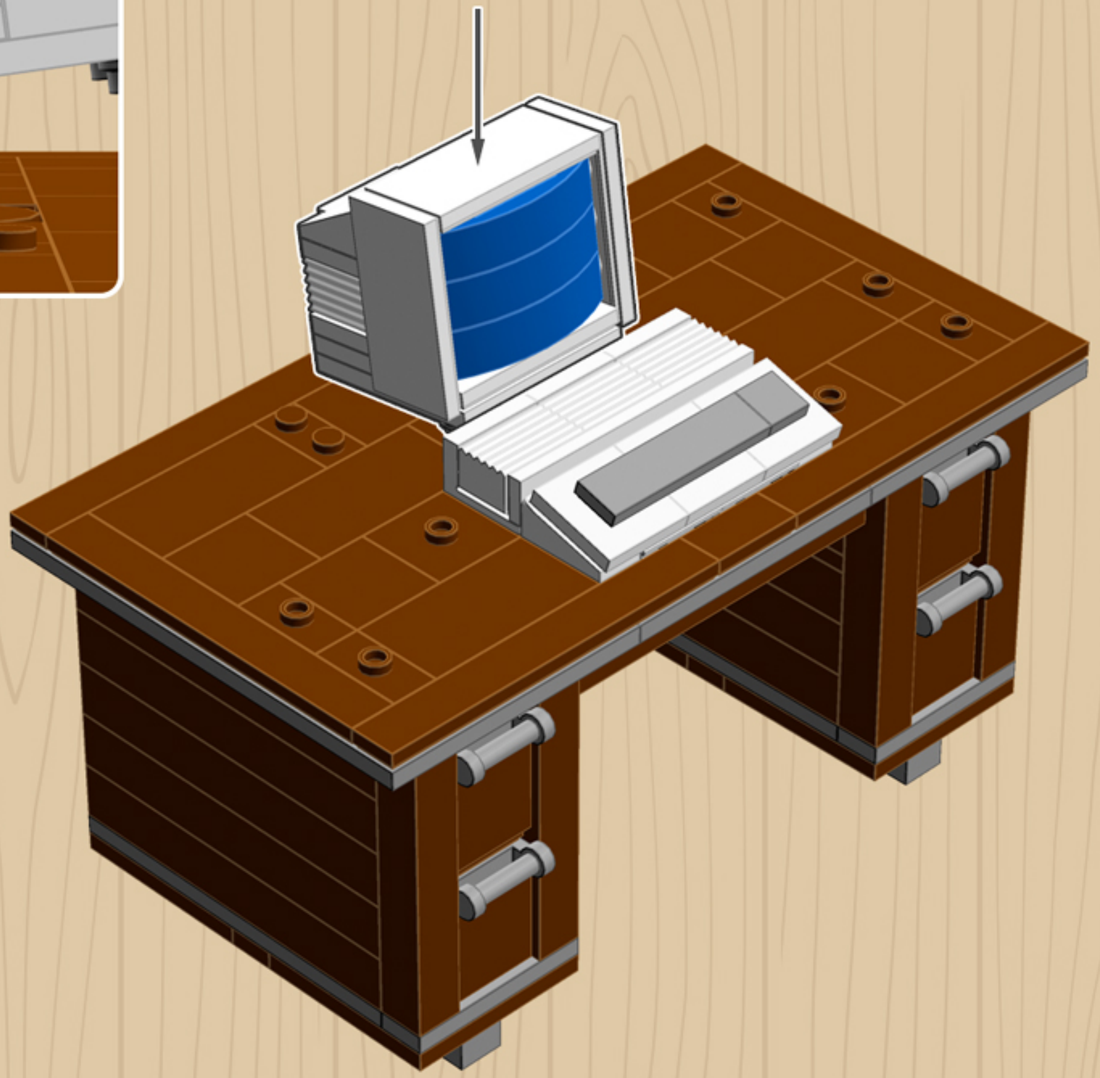

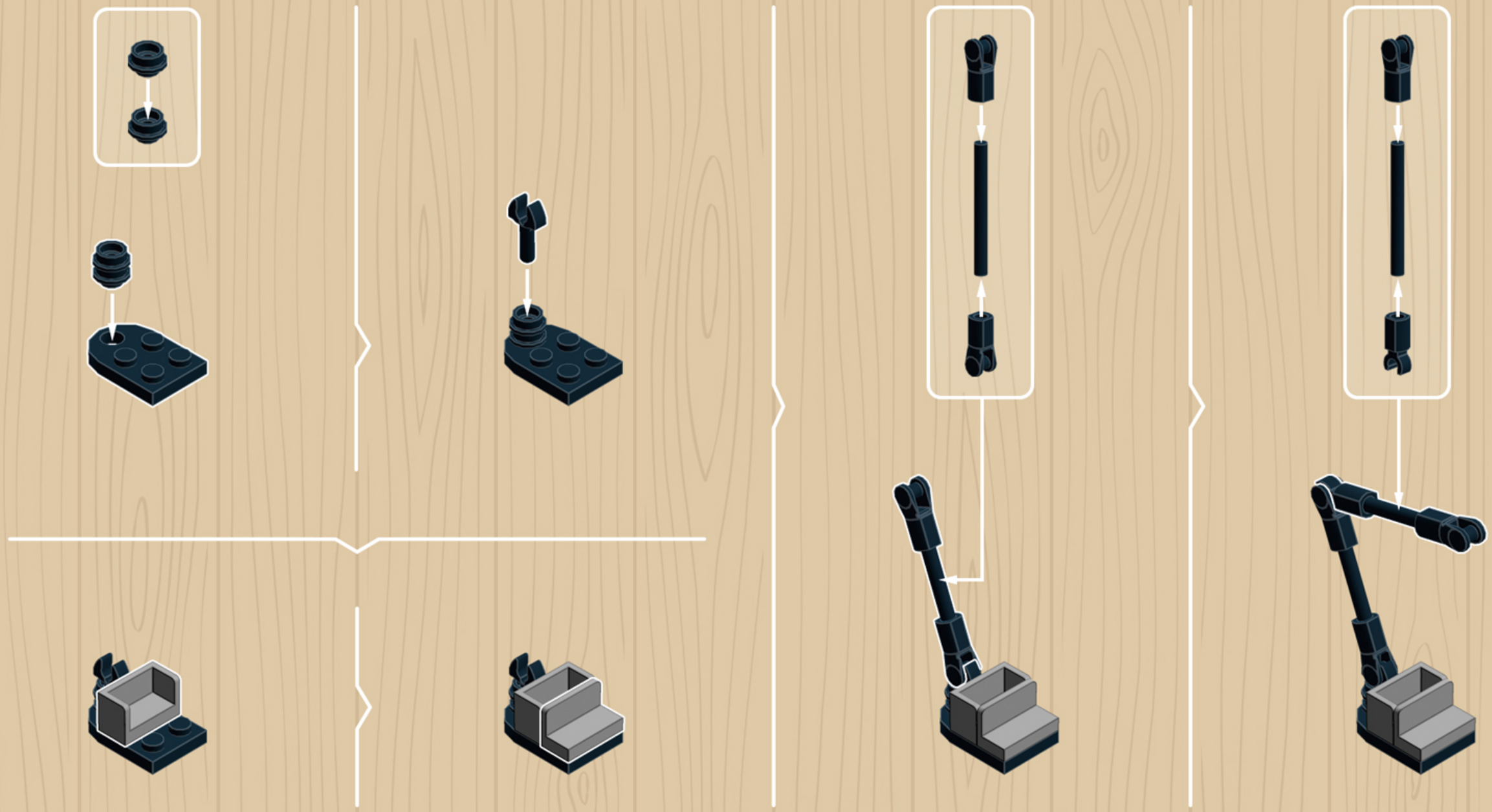

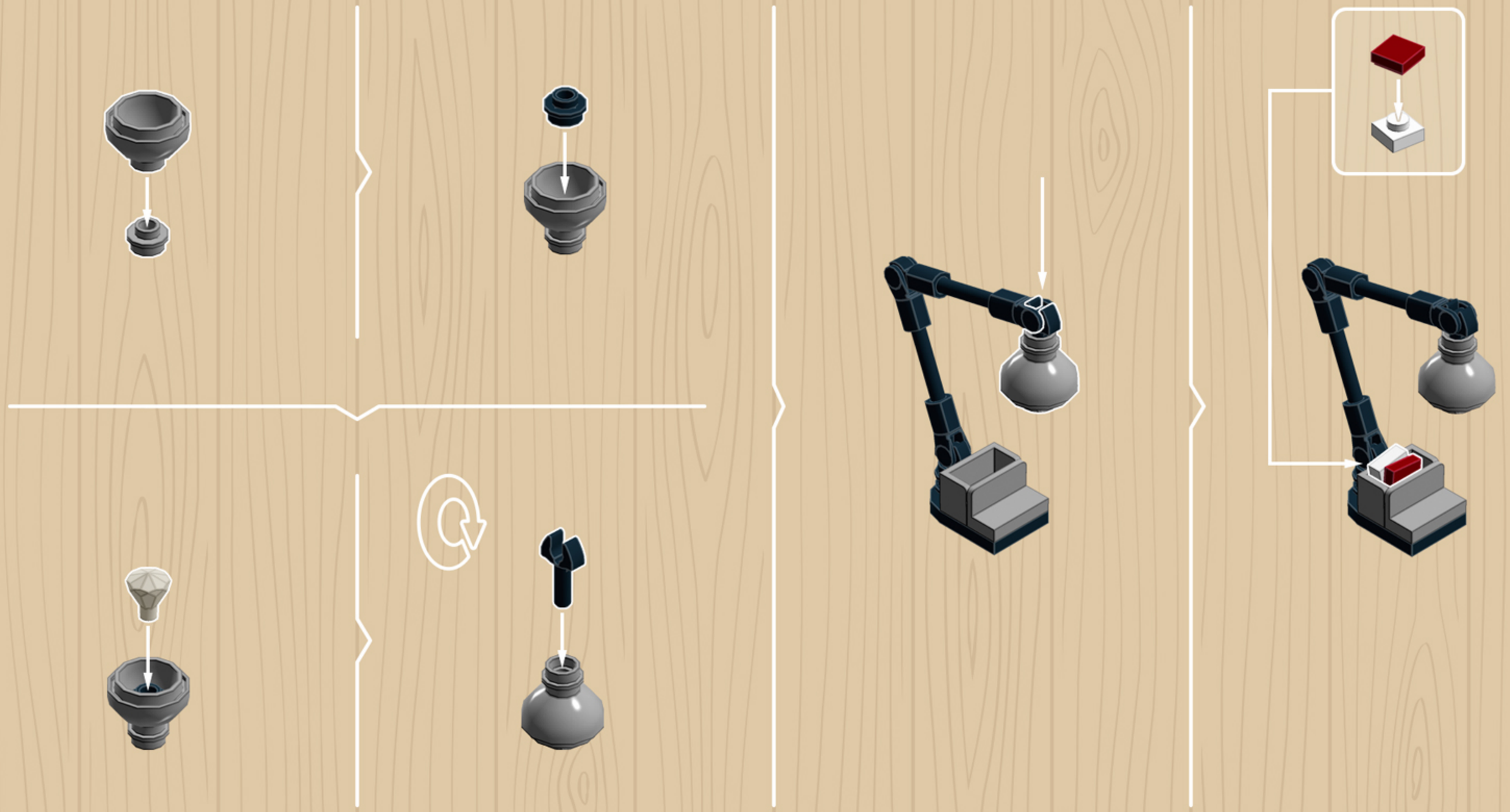

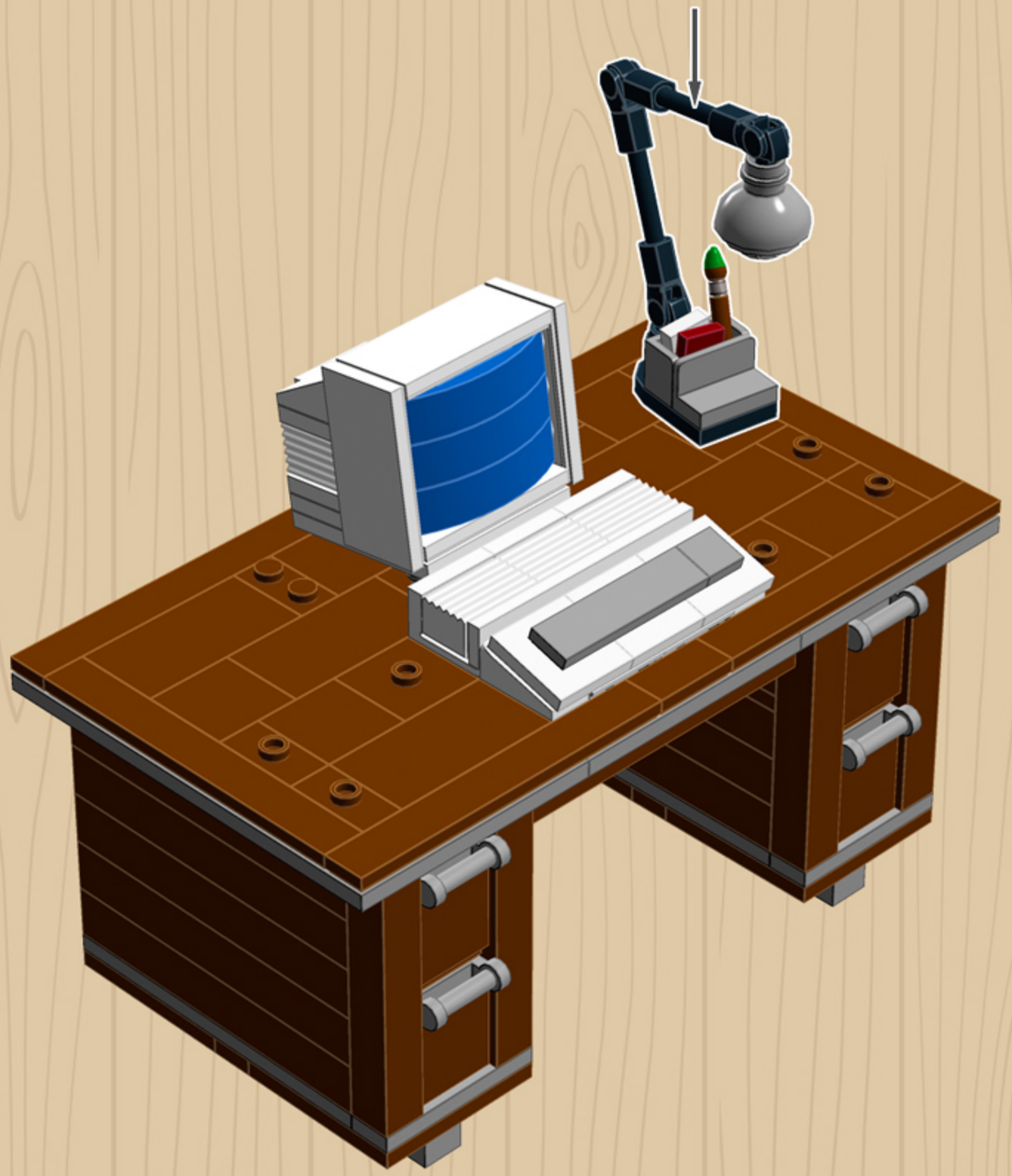

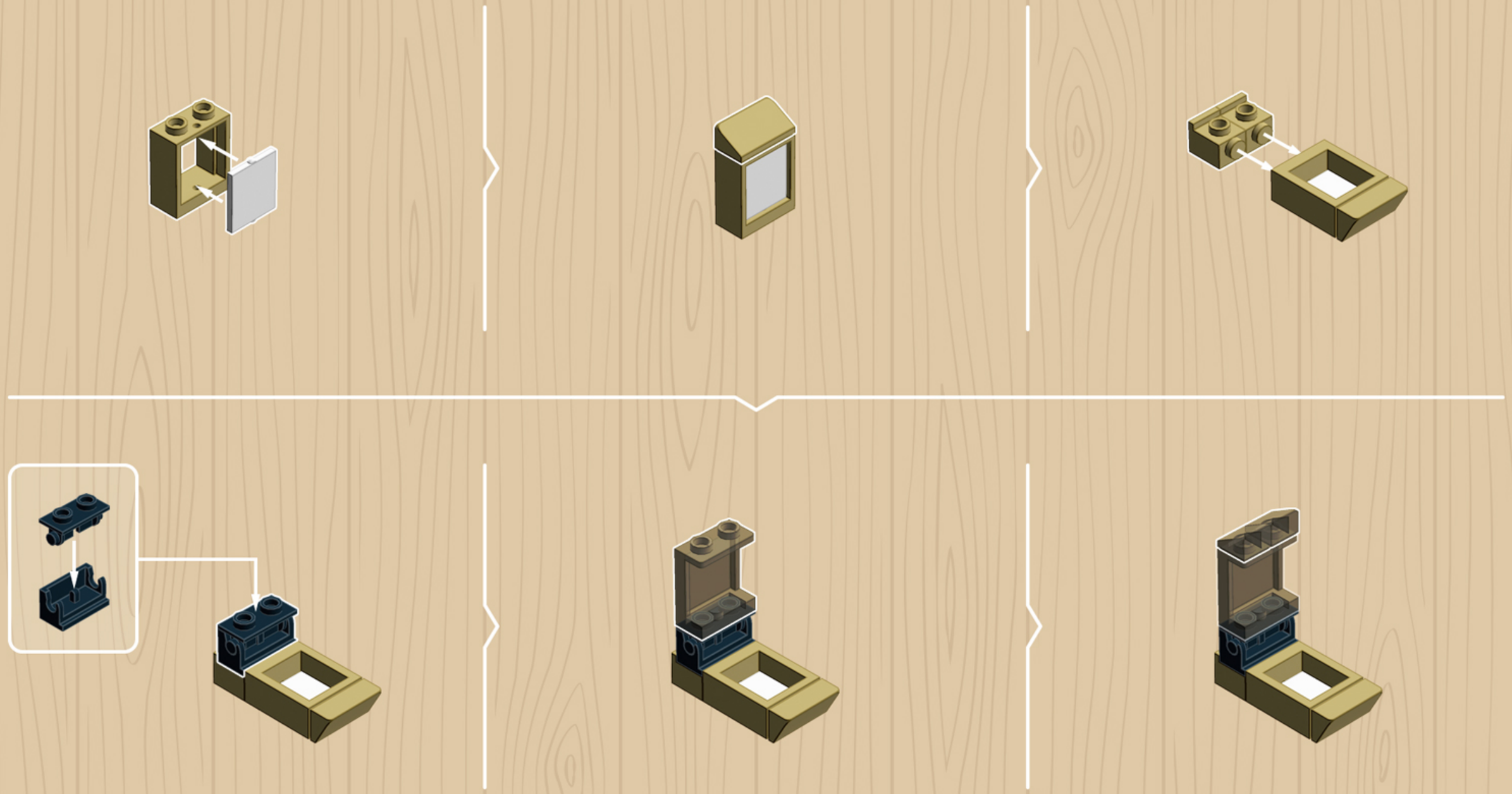

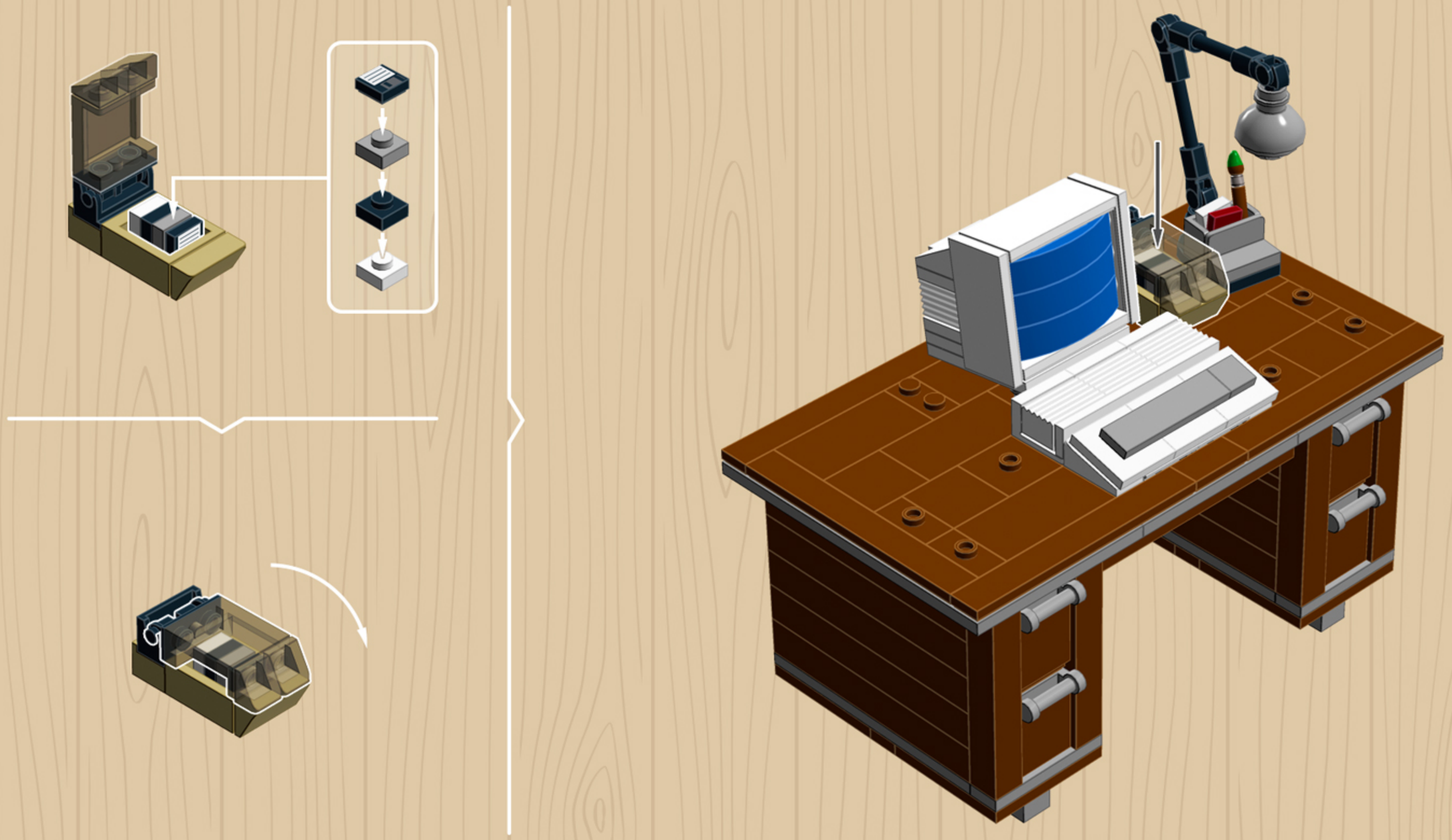

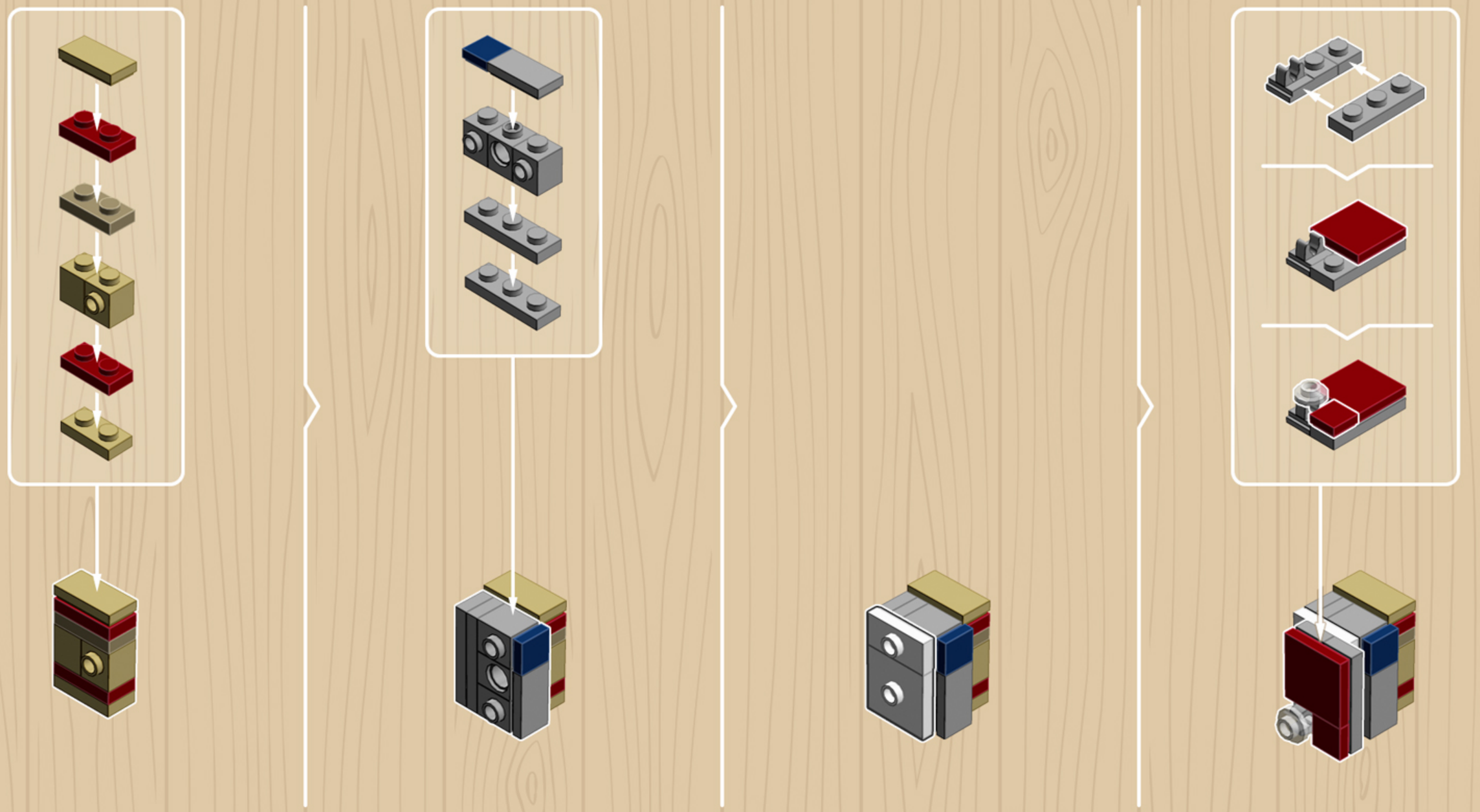

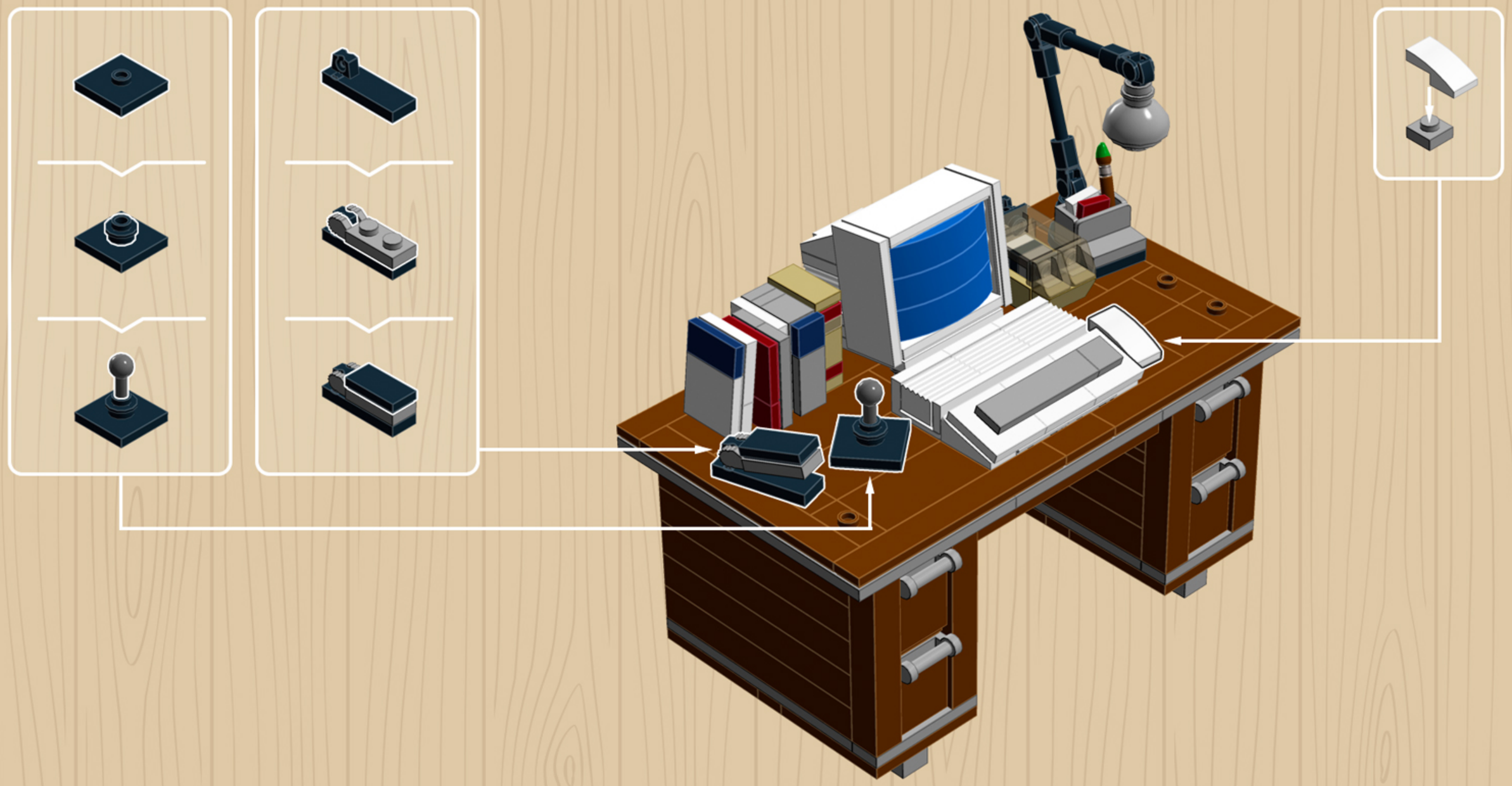

Office Chair building guides are available separately at chrismcveigh.com.

For more fun builds,
please stop by chrismcveigh.com,
visit me at facebook.com/c.mcveigh.photos,
or follow me on twitter @actionfigured

Purchase custom building kits at shop.chrismcveigh.com

These building guides are for personal use only. Unauthorized duplication, distribution and/or modification of these guides, in whole or in part, is strictly prohibited. The models contained within these guides are the copyright of Chris McVeigh, unless otherwise stated. Unauthorized reproduction of these models for resale, either in whole or as a building kit, is strictly prohibited.
© 2017 CHRIS MCVEIGH
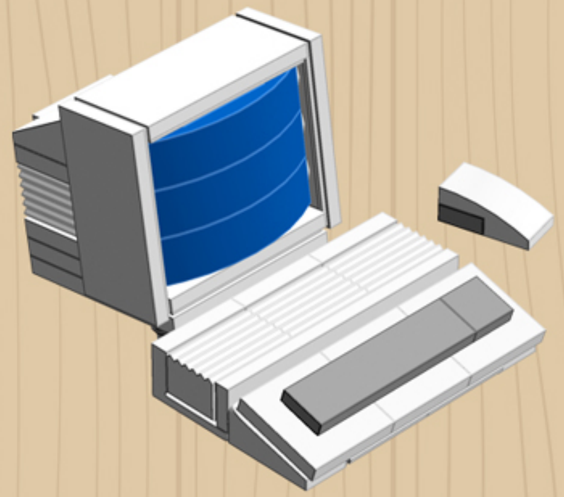
LEGO is a registered trademark of The LEGO Group.