MY OLD

Desktop

BYTE II EDITION

A LEGO® project by Chris McVeigh

chrismcveigh.com

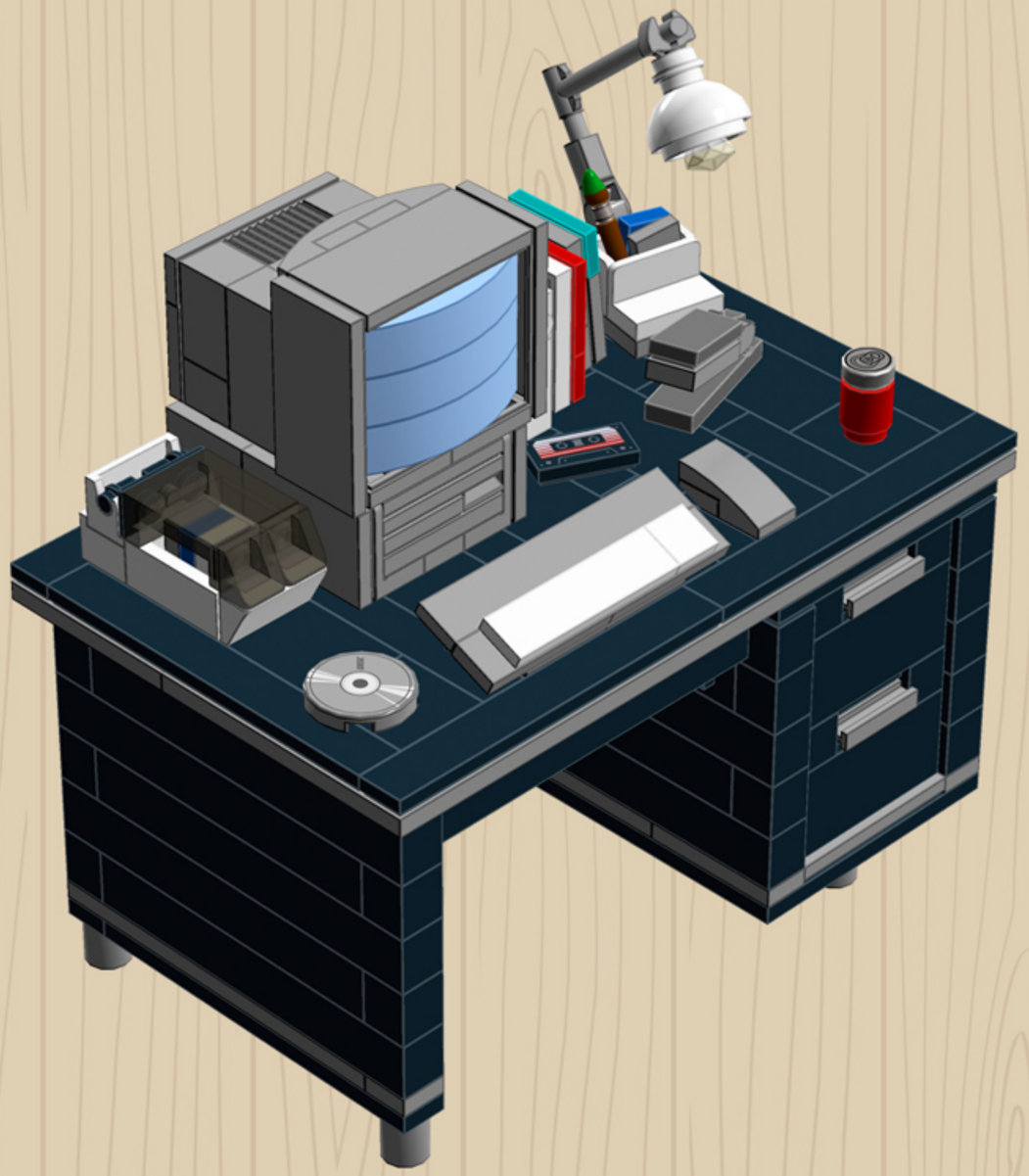

· BLACK ·

	Element ID	Color	Description	Quantity
	6020193	Black	Angular Plate 1.5 Bot. 1X2 1/2	2
	6117973	Black	Angle Plate 1X2 / 2X2	2
	300526	Black	Brick 1X1	6
	300426	Black	Brick 1X2	3
	301026	Black	Brick 1X4	3
	300926	Black	Brick 1X6	2
	300826	Black	Brick 1X8	20
	302426	Black	Plate 1X1	2
	302326	Black	Plate 1X2	9
	371026	Black	Plate 1X4	2
	346026	Black	Plate 1X8	3
	302226	Black	Plate 2X2	5
	242026	Black	Corner Plate 1X2X2	3
	303326	Black	Plate 6X10	1
	6092585	Black	Plate 1X2 W. 1 Knob	14

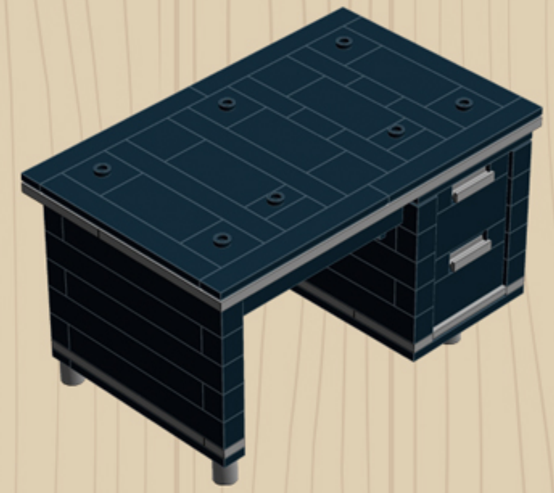

	Element ID	Color	Description	Quantity
	4565323	Black	Plate 2X2 W 1 Knob	5
	6047276	Black	Plate W. Bow 1X2X2/3	2
	654126	Black	Technic Brick 1X1	3
	370026	Black	Technic Brick 1X2, Ø4.9	3
	4121715	Black	Connector Peg W. Friction	3
	307026	Black	Flat Tile 1X1	4
	306926	Black	Flat Tile 1X2	8
	4558170	Black	Flat Tile 1X3	5
	243126	Black	Flat Tile 1X4	3
	663626	Black	Flat Tile 1X6	5
	416226	Black	Flat Tile 1X8	9
	306826	Black	Flat Tile 2X2	7
	4560182	Black	Flat Tile 2X4	7
	4143005	Bright Blue	Connector Peg W. Knob	4
	4211098	Dark Stone Grey	Brick 1X1	1

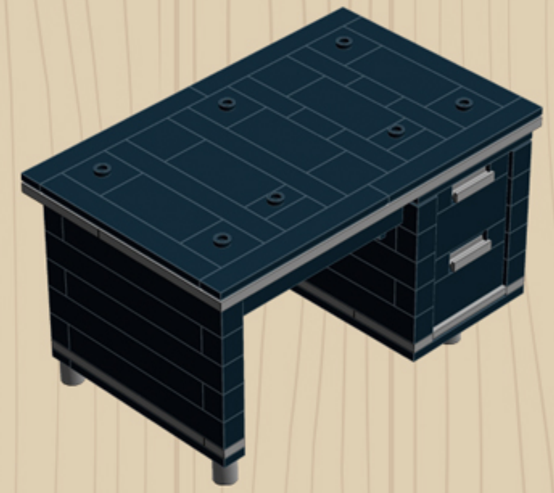

	Element ID	Color	Description	Quantity
	4211109	Dark Stone Grey	Brick Corner 1X2X2	3
	4558955	Dark Stone Grey	Brick 1X1 W. 1 Knob	2
	4211002	Dark Stone Grey	Plate 2X6	3
	4211042	Dark Stone Grey	Plate 2X2 Round	2
	4211055	Dark Stone Grey	Flat Tile 2X2	5
	4655241	Silver Metallic	Flat Tile 1X1, Round	2
	6014615	Medium Stone Grey	Angle Plate 1X2/1X4	1
	4654580	Medium Stone Grey	Angular Plate 1.5 Bot. 1X2 2/2	4
	6061702	Medium Stone Grey	Brick 1X1X3	2
	4211392	Medium Stone Grey	Brick 1X8	1
	4211399	Medium Stone Grey	Plate 1X1	1
	4211429	Medium Stone Grey	Plate 1X3	4
	4211445	Medium Stone Grey	Plate 1X4	2
	4211438	Medium Stone Grey	Plate 1X6	3
	4211425	Medium Stone Grey	Plate 1X8	2

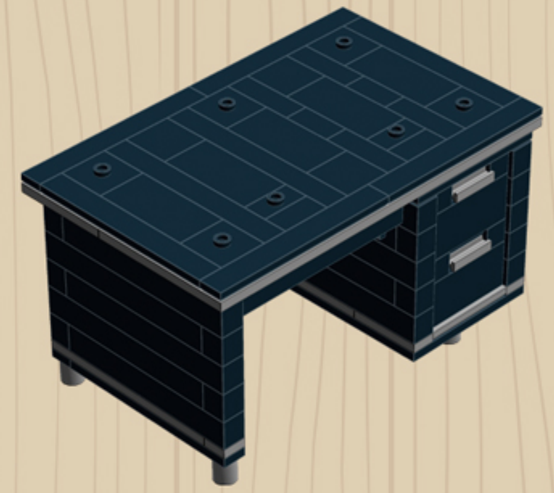

	Element ID	Color	Description	Quantity
	4211397	Medium Stone Grey	Plate 2X2	1
	4211353	Medium Stone Grey	Corner Plate 1X2X2	4
	4211395	Medium Stone Grey	Plate 2X4	2
	4211407	Medium Stone Grey	Plate 4X8	2
	4211733	Medium Stone Grey	Plate 6X16	1
	4211568	Medium Stone Grey	Plate 1X2 With Slide	2
	6183784	Medium Stone Grey	Beam 1X1	4
	4211356	Medium Stone Grey	Flat Tile 1X4	1
	4211481	Medium Stone Grey	Flat Tile 1X8	6
	301001	White	Brick 1X4	2
	4599974	White	Frame 1X4X4	2
	4585448	White	Wall Element 1X2X3	3
	4558208	White	Wall Element 1X4X3, Abs	2
	242001	White	Corner Plate 1X2X2	4

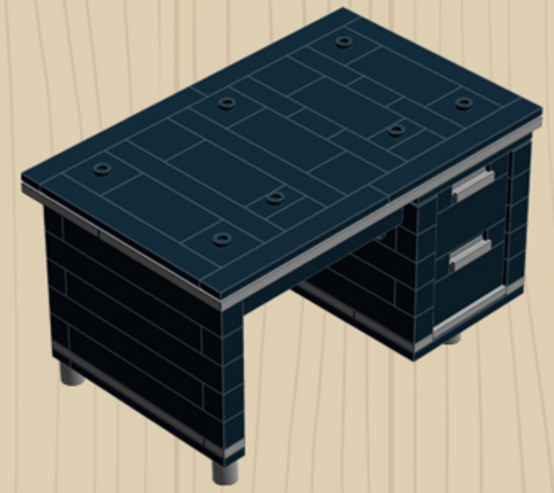

	Element ID	Color	Description	Quantity
	4253815	Black	Brick 1X2 W. Four Knobs	1
	306926	Black	Flat Tile 1X2	1
	6209734	Black	Flat Tile 1X2, No. 210	1
	6012466	Black	Magnifying Glass 40/26	1
	393826	Black	Plate 1X2 (Rocking)	1
	4296142	Black	Plate 1X3 W/Stub/Along/U.P.	1
	393726	Black	Rocker Bearing 1X2	1
	6096955	Black	String 11M W. 2 Knobs	1
	6030875-h	Black	Tool Set (Hammer)	1
	6030875-g	Black	Tool Set (Open Firm Key)	1
	302423	Bright Blue	Plate 1X1	4
	6213779	Bright Bluish Green	Flat Tile 1X2	1
	6213778	Bright Bluish Green	Plate 1X1	3
	307021	Bright Red	Flat Tile 1X1	1
	306821	Bright Red	Flat Tile 2X2	1

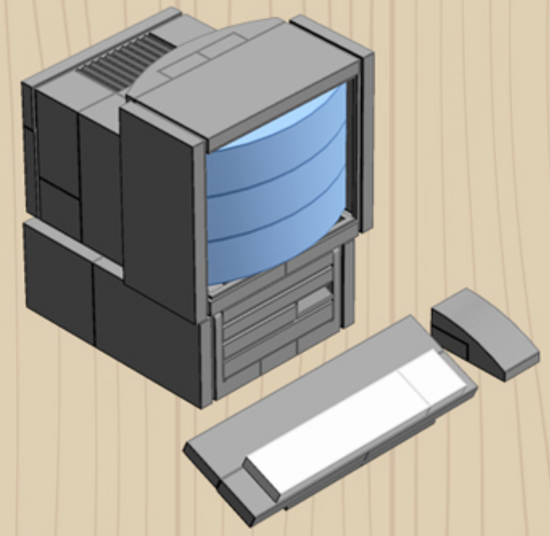

	Element ID	Color	Description	Quantity
	306221	Bright Red	Round Brick 1X1	1
	4653988	Dark Azur	Plate 1X2	8
	6151671	Dark Azur	Plate 1X2 W. 1 Knob	1
	6029163	Dark Azur	Plate 2X2 W 1 Knob	1
	4211052	Dark Stone Grey	Flat Tile 1X2	1
	6092572	Dark Stone Grey	Plate 1X2 W. 1 Knob	2
	4210882	Dark Stone Grey	Plate 1X3 W/Stub/Along/U.P.	1
	6132423	Light Royal Blue	Plate 2X3	1
	6133057	Light Royal Blue	Plate W. Bow 1X4X2/3	3
	6063897	Medium Lilac	Brick 1X1 W. 1 Knob	6
	6167471	Medium Lilac	Flat Tile 1X3	2
	6035470	Medium Lilac	Plate 1X3	3
	6152107	Medium Stone Grey	3.2 Shaft W/3.2 Hole	1
	6014615	Medium Stone Grey	Angle Plate 1X2/1X4	2

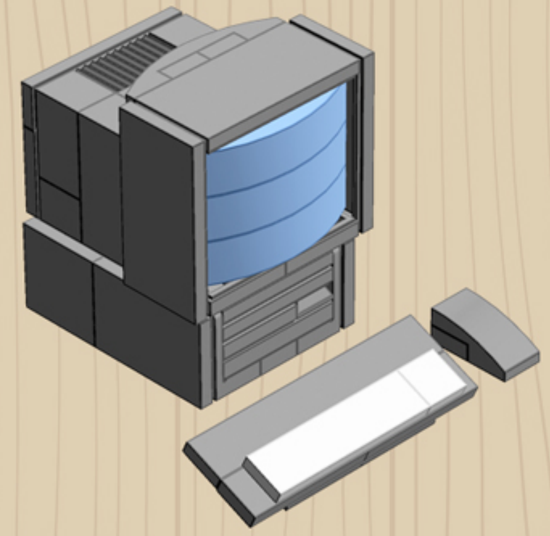

	Element ID	Color	Description	Quantity
	6004990	Medium Stone Grey	Angular Plate 1.5 Bot. 1X2 1/2	2
	4654580	Medium Stone Grey	Angular Plate 1.5 Bot. 1X2 2/2	4
	4558953	Medium Stone Grey	Brick 1X1 W. 1 Knob	2
	4211388	Medium Stone Grey	Brick 1X2	4
	6015344	Medium Stone Grey	Brick 1X2 W. 2 Knobs	2
	4211428	Medium Stone Grey	Brick 1X3	2
	4211353	Medium Stone Grey	Corner Plate 1X2X2	4
	4211419	Medium Stone Grey	Coupling Plate 2X2	1
	4211415	Medium Stone Grey	Flat Tile 1X1	1
	4211414	Medium Stone Grey	Flat Tile 1X2	3
	4558169	Medium Stone Grey	Flat Tile 1X3	2
	4211356	Medium Stone Grey	Flat Tile 1X4	1
	4211549	Medium Stone Grey	Flat Tile 1X6	1
	4211413	Medium Stone Grey	Flat Tile 2X2	3

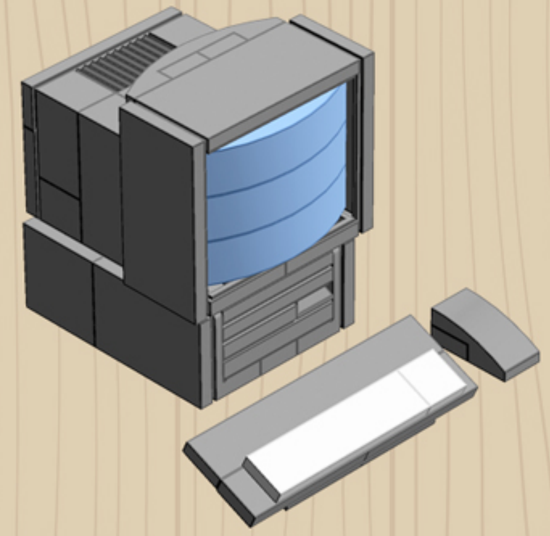

	Element ID	Color	Description	Quantity
	6171894	Medium Stone Grey	Flat Tile 2X3	4
	4560183	Medium Stone Grey	Flat Tile 2X4	3
	6065824	Medium Stone Grey	Flat Tile Corner 1X2X2	4
	4565433	Medium Stone Grey	Function Element Male	1
	6134378	Medium Stone Grey	Gold Ingot	1
	6168647	Medium Stone Grey	Pl.Round 1X1 W. Throughg. Hole	2
	4211399	Medium Stone Grey	Plate 1X1	4
	4211398	Medium Stone Grey	Plate 1X2	4
	6066097	Medium Stone Grey	Plate 1X2 W. 1 Knob	1
	4211804	Medium Stone Grey	Plate 1X2 W/Fork/Vertical/End	2
	4211429	Medium Stone Grey	Plate 1X3	5
	6211969	Medium Stone Grey	Plate 1X3 W/ 2 Knobs	2
	4211445	Medium Stone Grey	Plate 1X4	3
	4211397	Medium Stone Grey	Plate 2X2	4

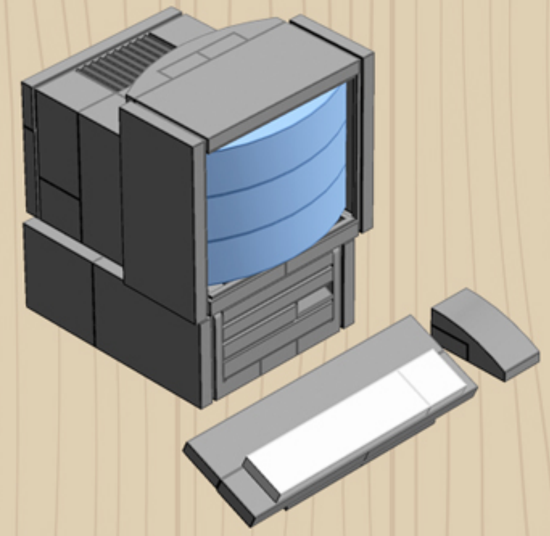

	Element ID	Color	Description	Quantity
	4211881	Medium Stone Grey	Plate 2X2 (Rocking)	2
	4654577	Medium Stone Grey	Plate 2X2X2/3 W. 2. Hor. Knob	1
	6015347	Medium Stone Grey	Plate 3X3	2
	6028813	Medium Stone Grey	Plate W. Bow 1X2X2/3	1
	4622803	Medium Stone Grey	Plate W. Bow 1X4X2/3	1
	4211383	Medium Stone Grey	Profile Brick 1X2	1
	4542590	Medium Stone Grey	Stick Ø 3.2 W. Holder	2
	4539090	New Dark Red	Flat Tile 1X2	1
	4539097	New Dark Red	Plate 1X2	2
	6047551	Reddish Brown	Mini Brush "No. 1"	1
	4221744	Reddish Brown	Plate 1X1	2
	6186045	Reddish Brown	Rocker Bearing 1X2	1
	6117400	Silver Metallic	Flat Tile 1X1, Round "No. 35"	1
	6096993	Silver Metallic	Scissors W. 3.2 Shaft	1

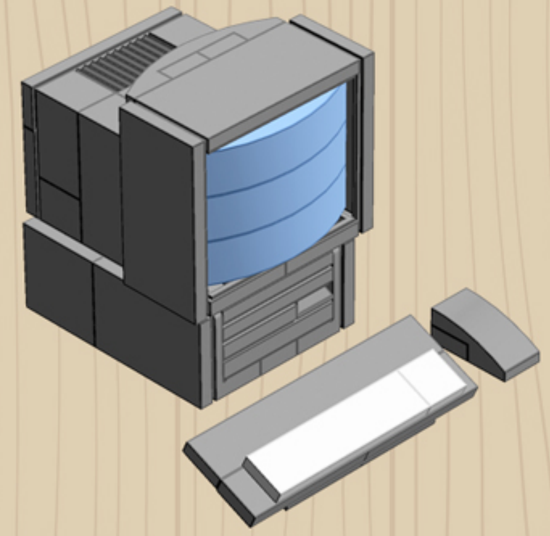

	Element ID	Color	Description	Quantity
	4244368	Tr. Brown	Roof Tile 1X1X2/3	2
	4638658	Tr. Brown	Wall Element 1X2X2	1
	6153264	Transparent	3.2 Shaft W/ Knob	1
	4248937	Transparent	Diamond with Stick	1
	6112751	Transparent	Plate 1X1 W/3.2 Shaft/1.5 Hole	2
	6039771	Warm Gold	Flat Tile 1X1, Round "No. 14"	1
	6138682	Warm Gold	Mini Figure Trophy	1
	6069887	Warm Gold	Plate 1X1	1
	407001	White	Angular Brick 1X1	2
	4558952	White	Brick 1X1 W. 1 Knob	2
	6050914	White	Dome 2X2, Inverted W. One Stud	1
	307001	White	Flat Tile 1X1	1
	306901	White	Flat Tile 1X2	1
	243101	White	Flat Tile 1X4	1

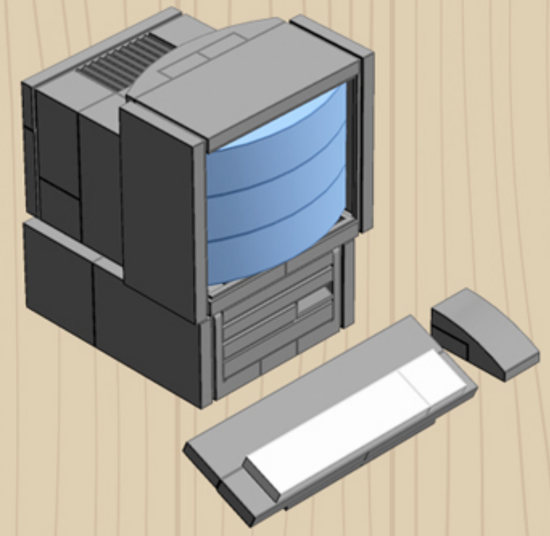

	Element ID	Color	Description	Quantity
	6156667	White	Flat Tile 2X3	3
	4521210	White	Frame 1X2X2	1
	6129749	White	Glass For Frame 1X2x2	1
	6168642	White	Pl.Round 1X1 W. Throughg. Hole	2
	302401	White	Plate 1X1	7
	4598527	White	Plate 1X2 W. Vertical Grip	1
	362301	White	Plate 1X3	3
	393701	White	Rocker Bearing 1X2	1
	4547489	White	Roof Tile 1X2X2/3, Abs	1
	654101	White	Technic Brick 1X1	1
	6135529	White	Wall Double Corner 1X2X1	1
	486501	White	Wall Element 1X2X1	1
	N/A*	Medium Stone Grey	Flat Tile 1X1 - 3.5” Disk	1
	N/A*	Medium Stone Grey	Flat Tile 2X2, Round - CD-ROM	1

** Custom-printed parts are only available with purchase at shop.chrismcveigh.com*

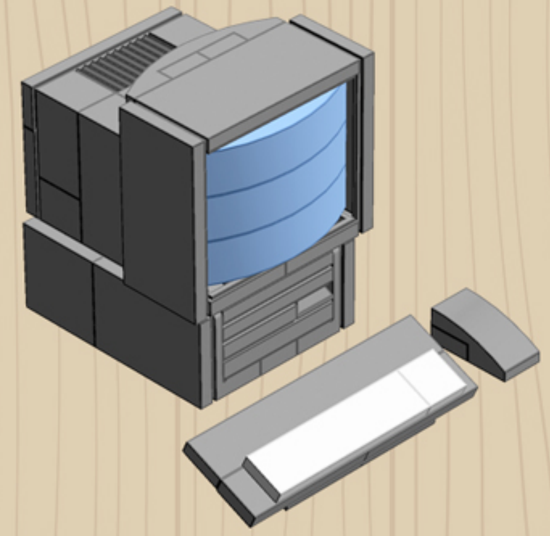

1
2

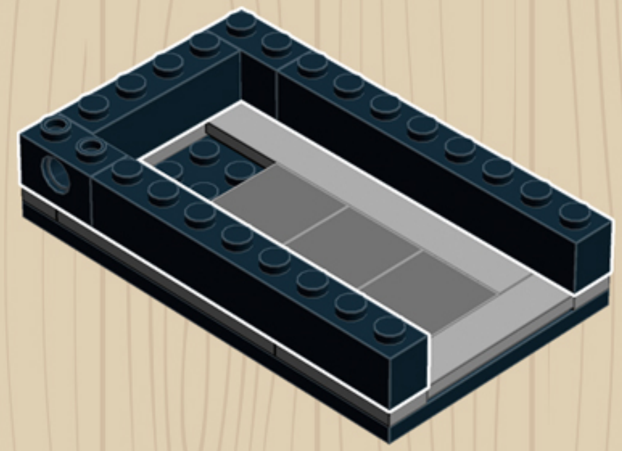

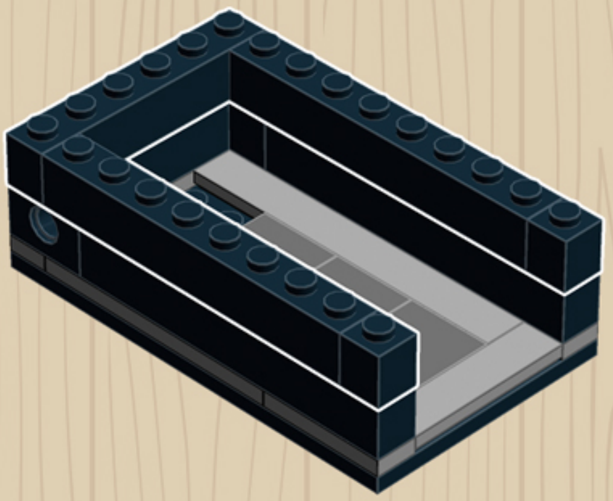

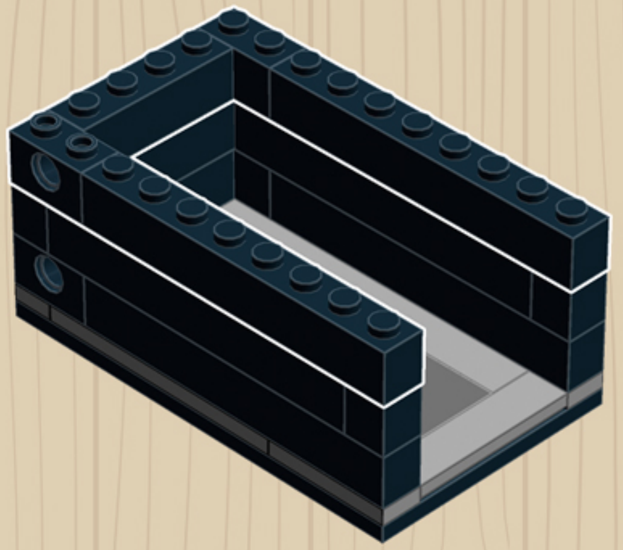

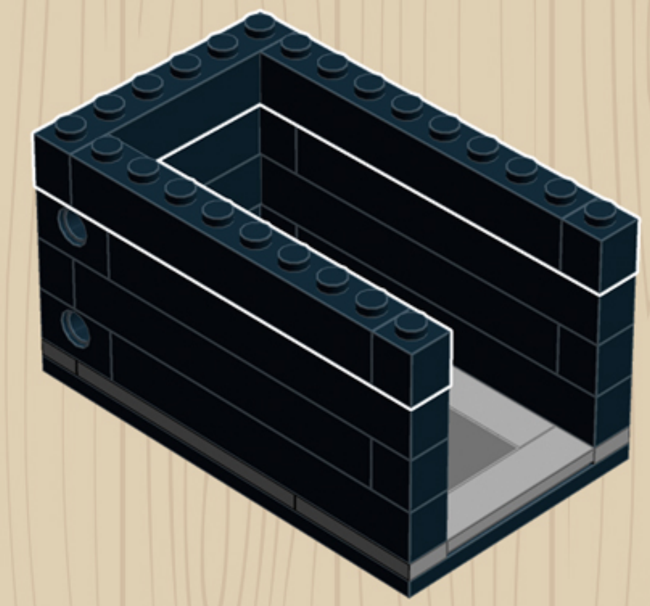

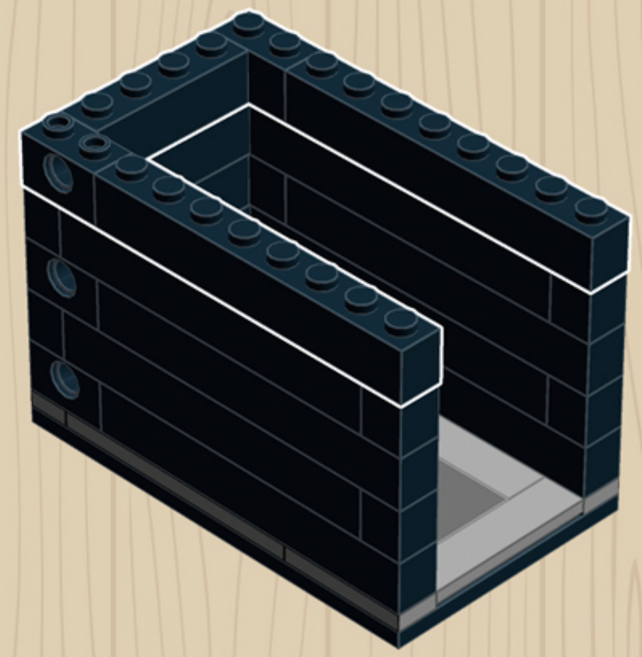

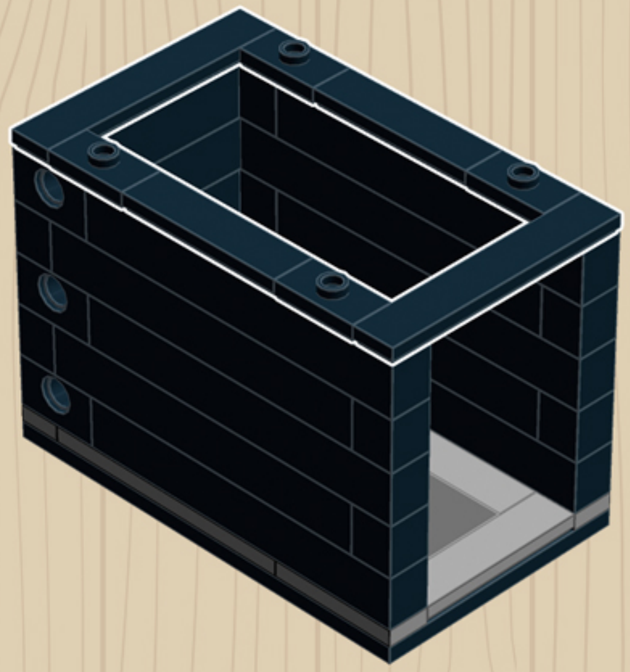

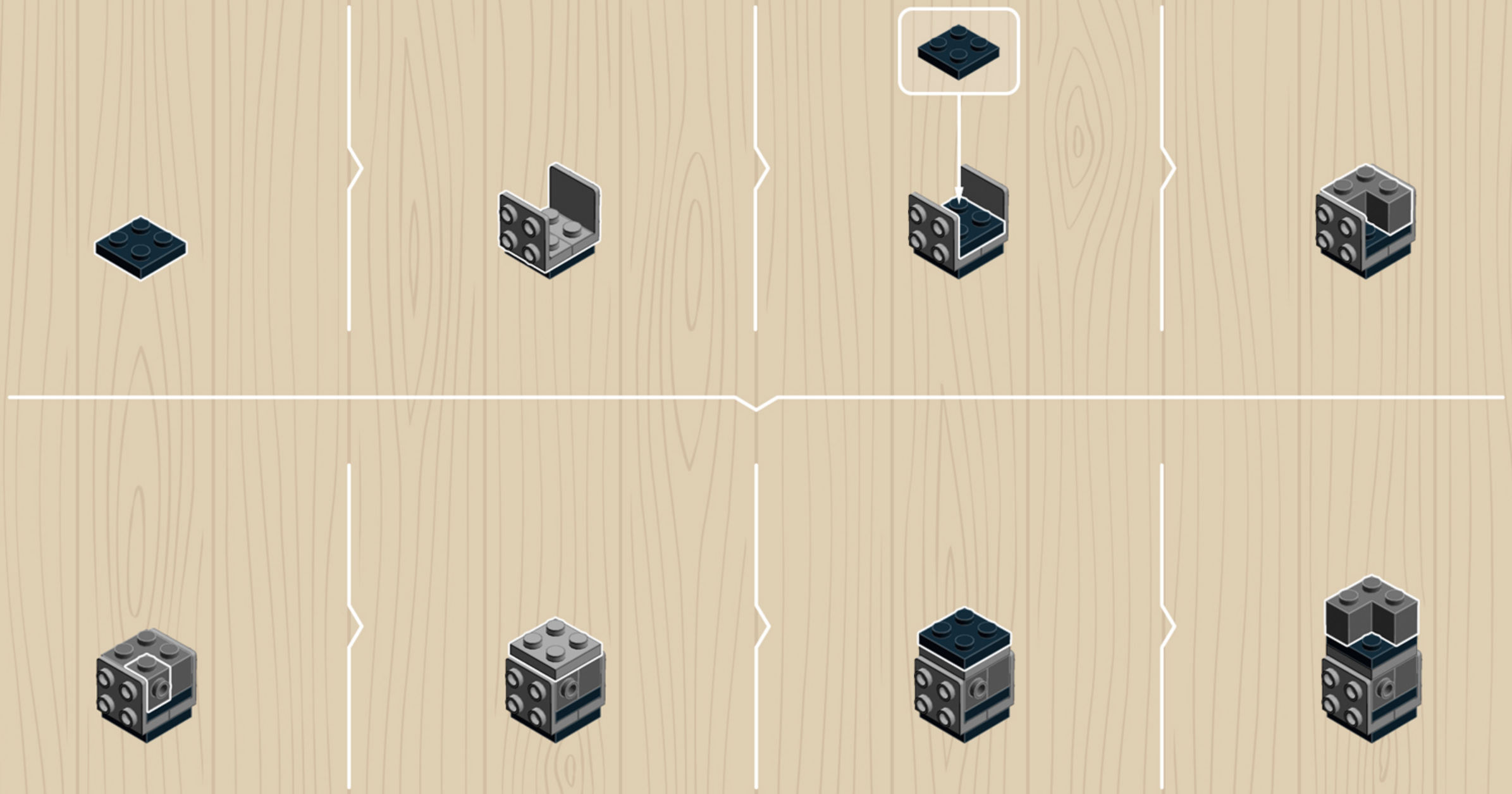

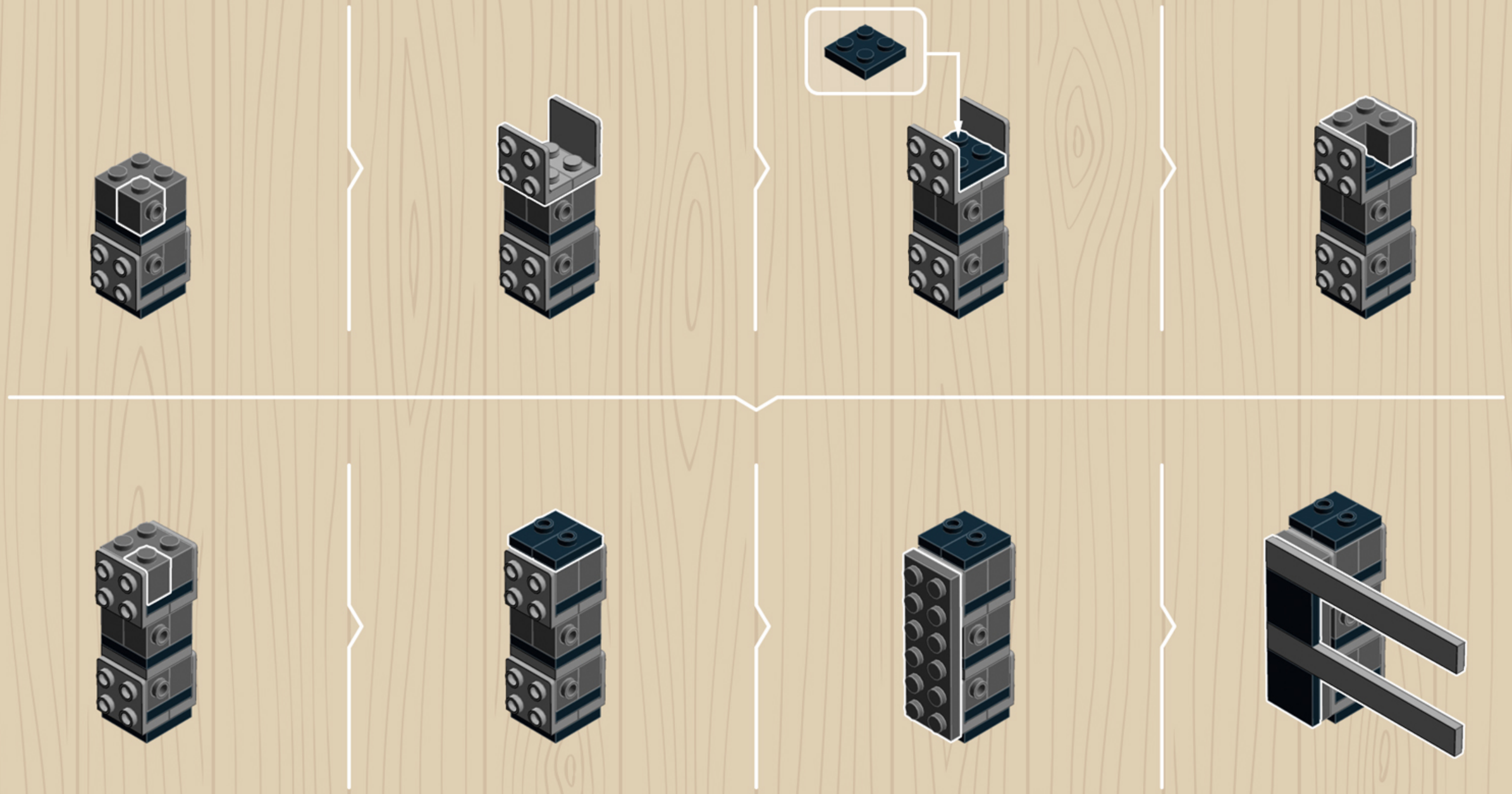

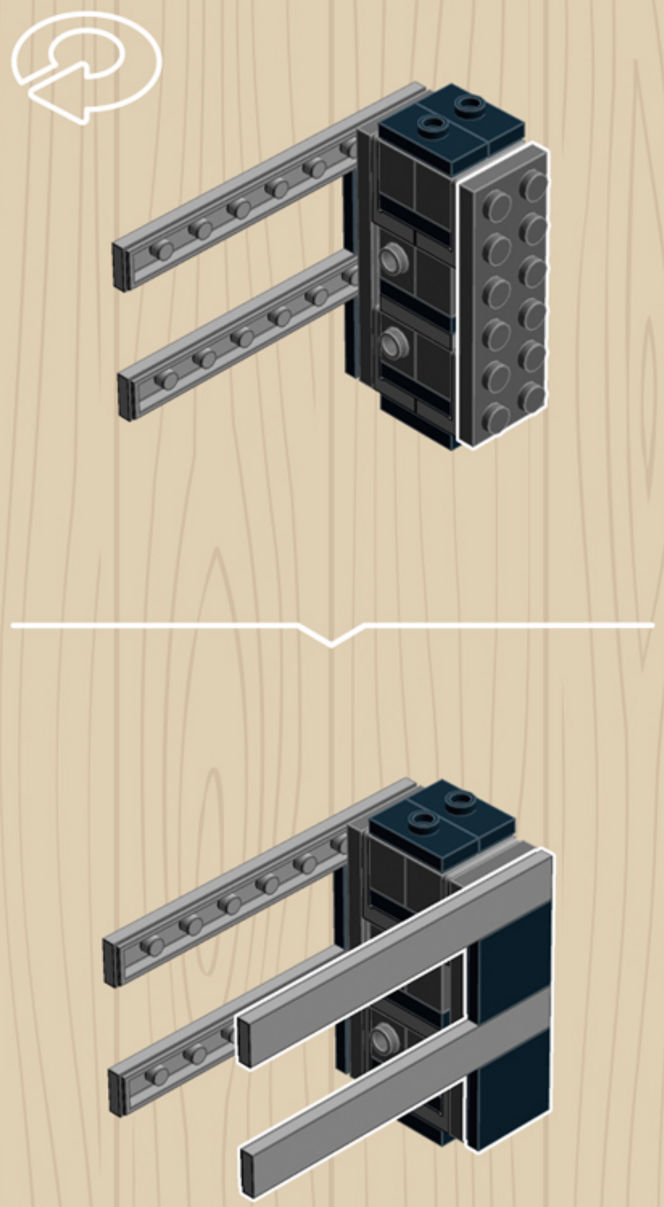

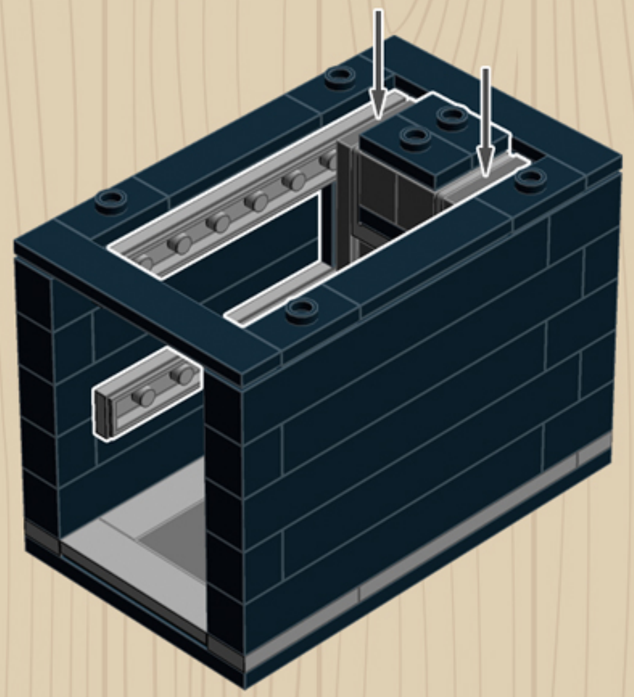

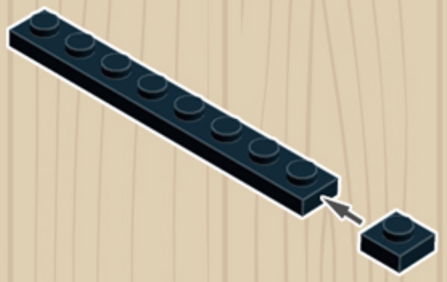

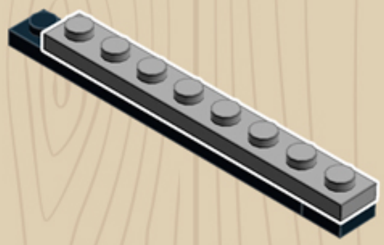

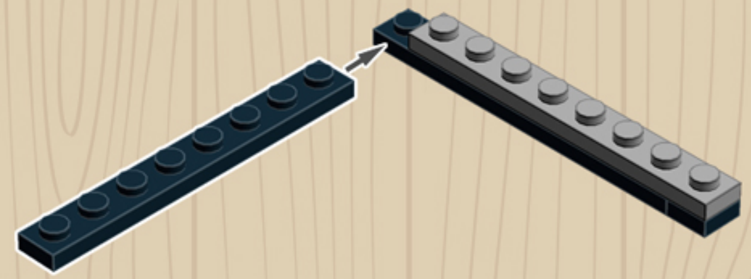

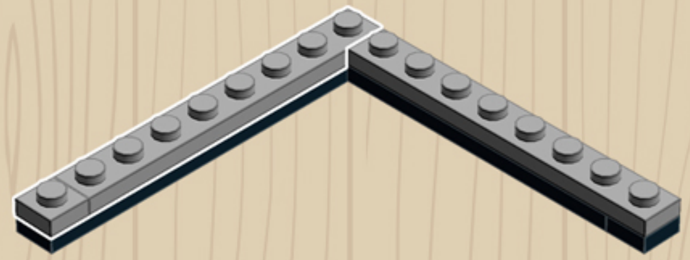

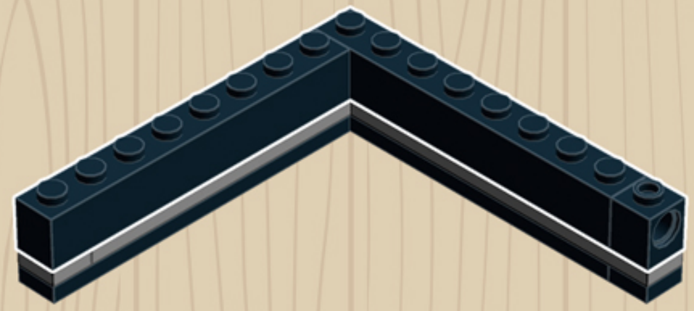

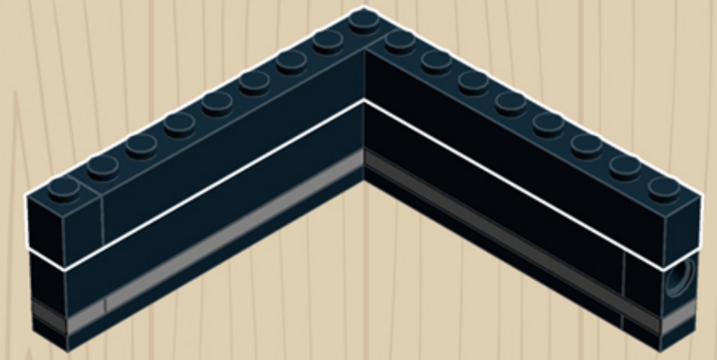

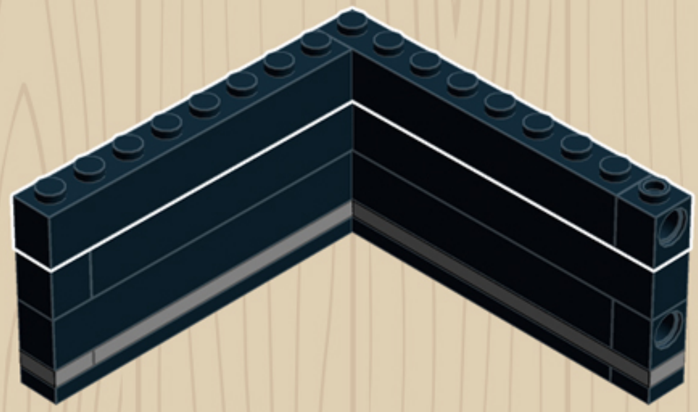

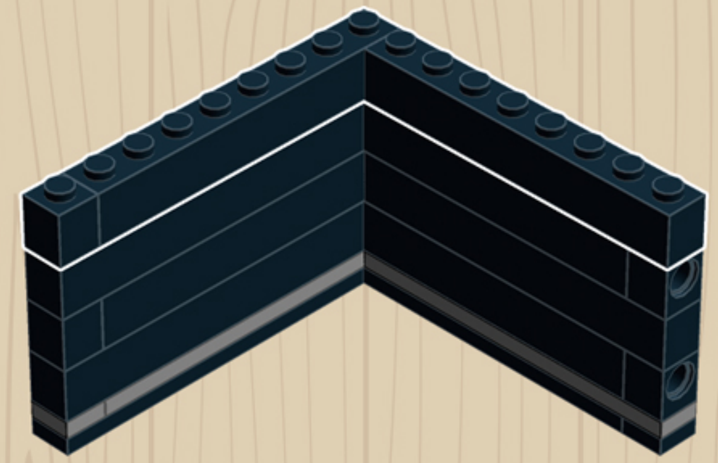

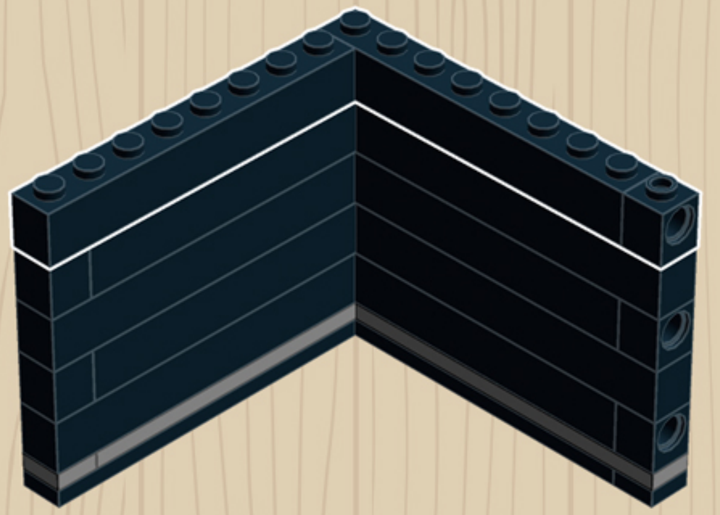

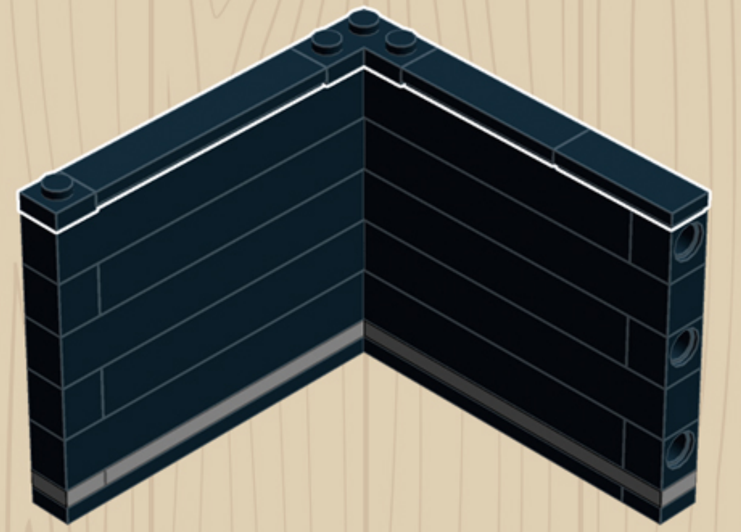

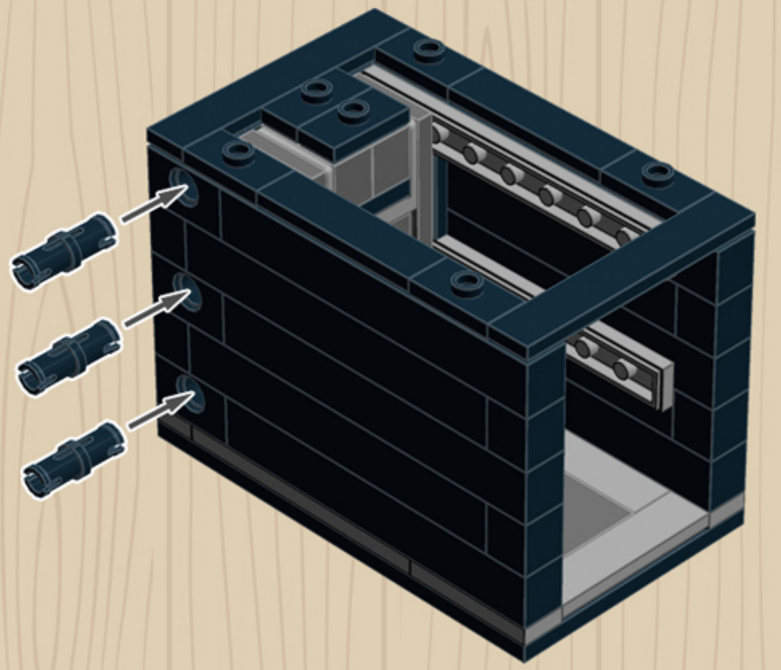

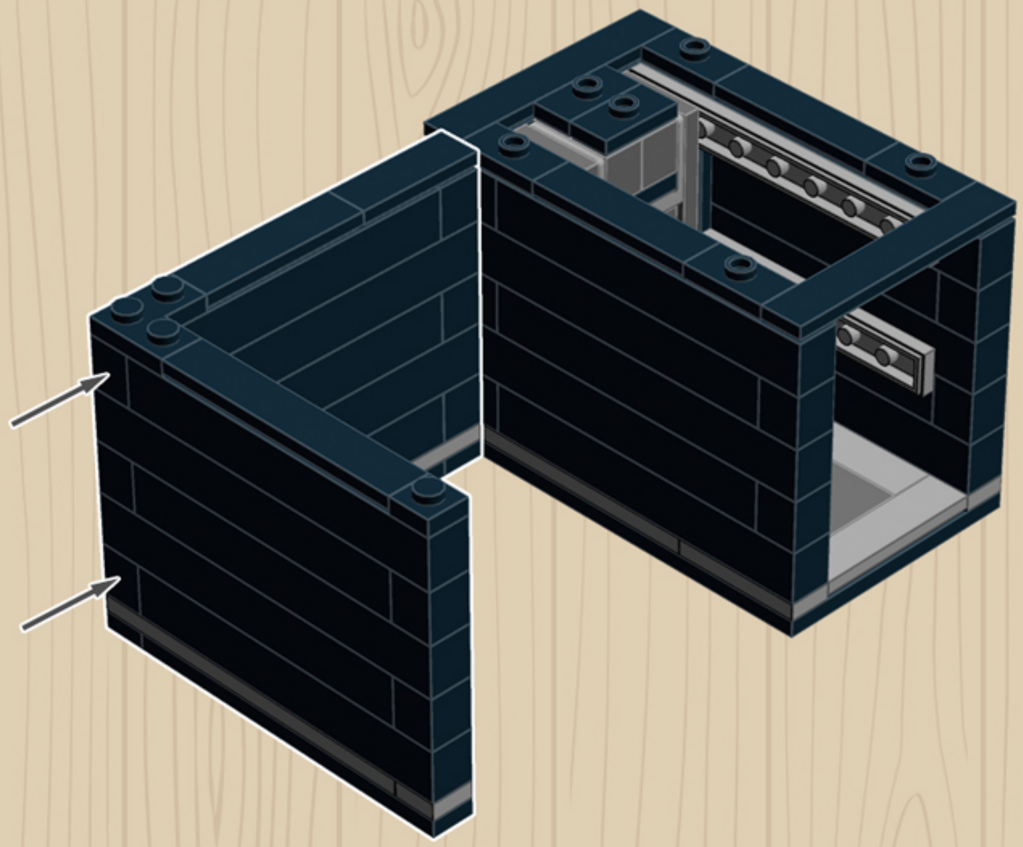

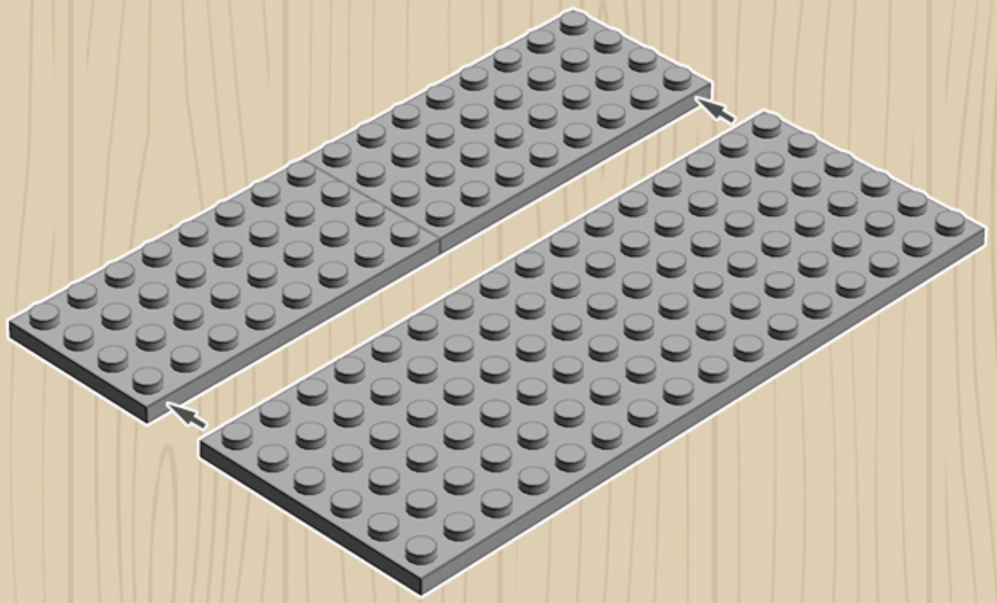

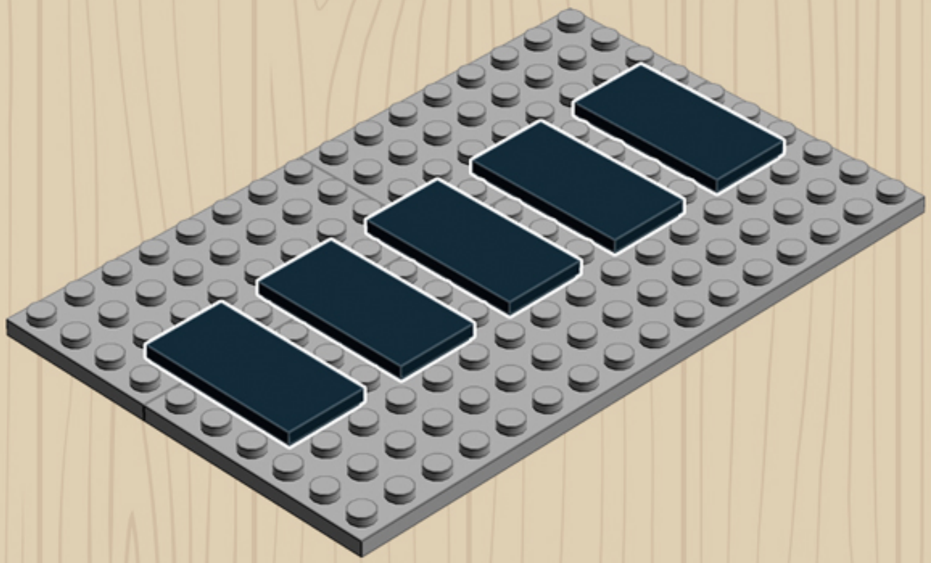

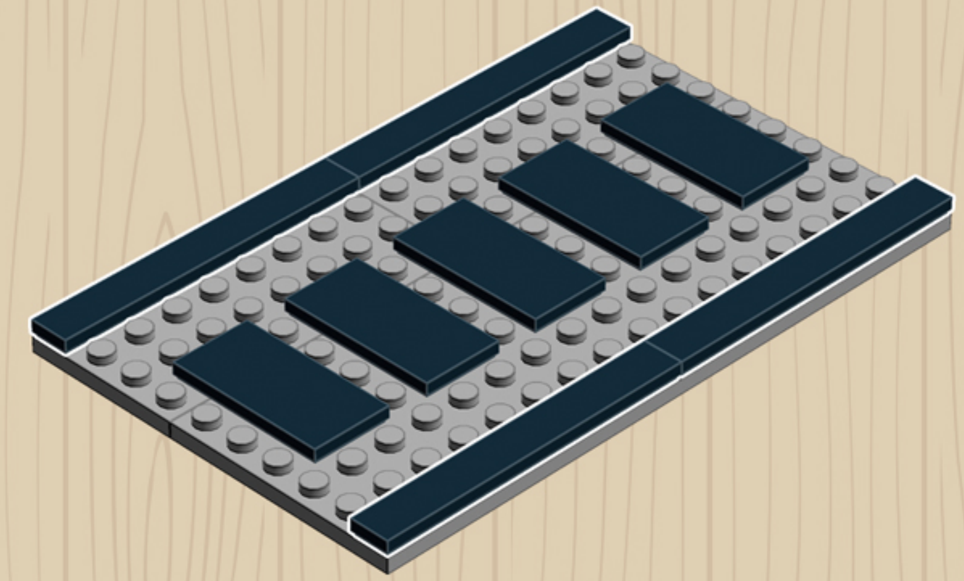

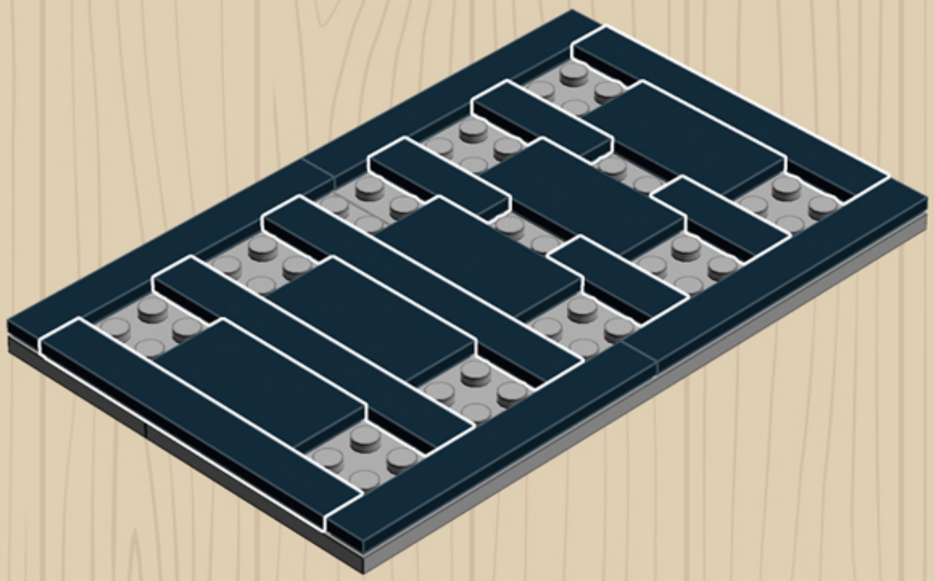

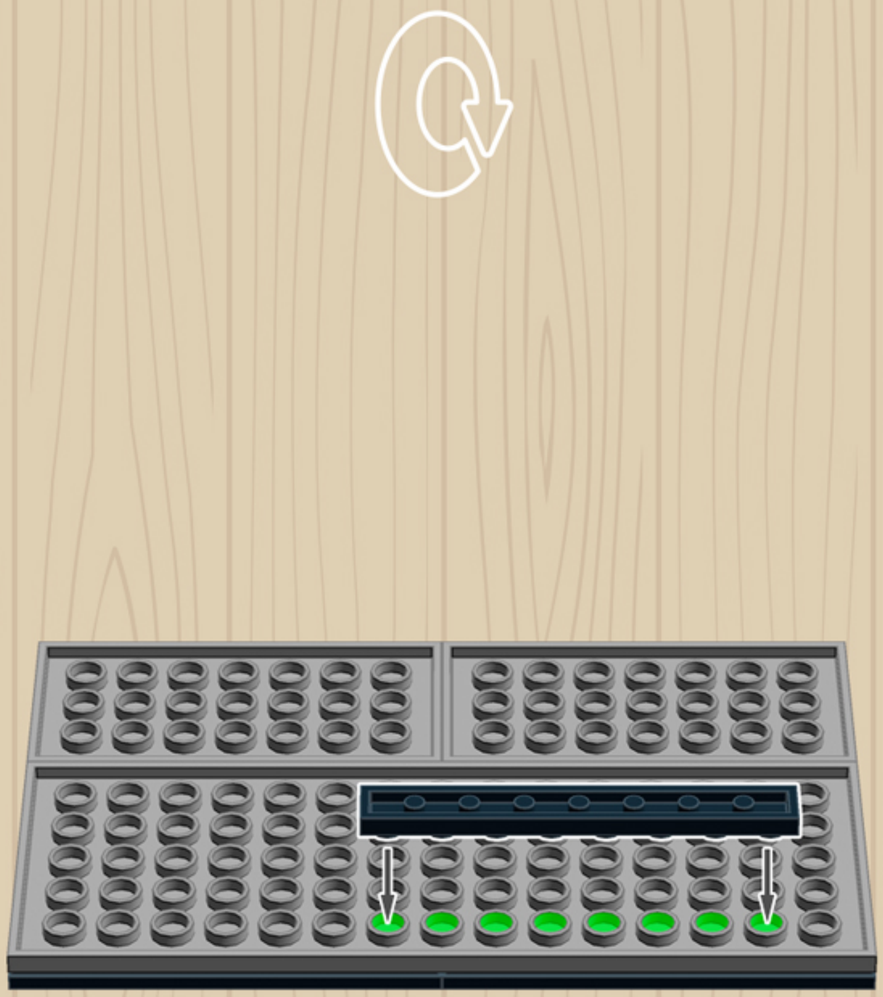

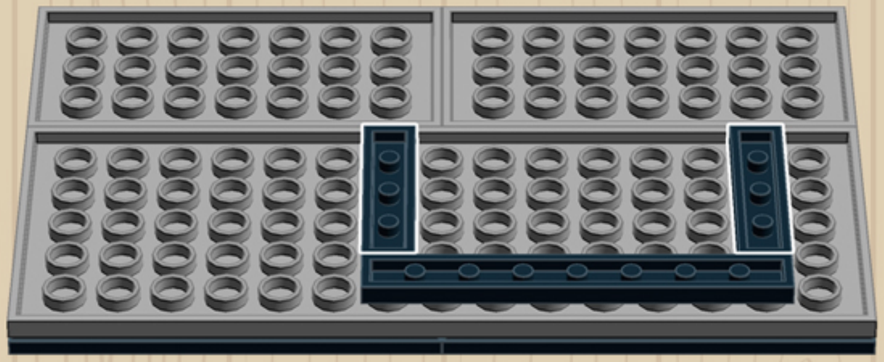

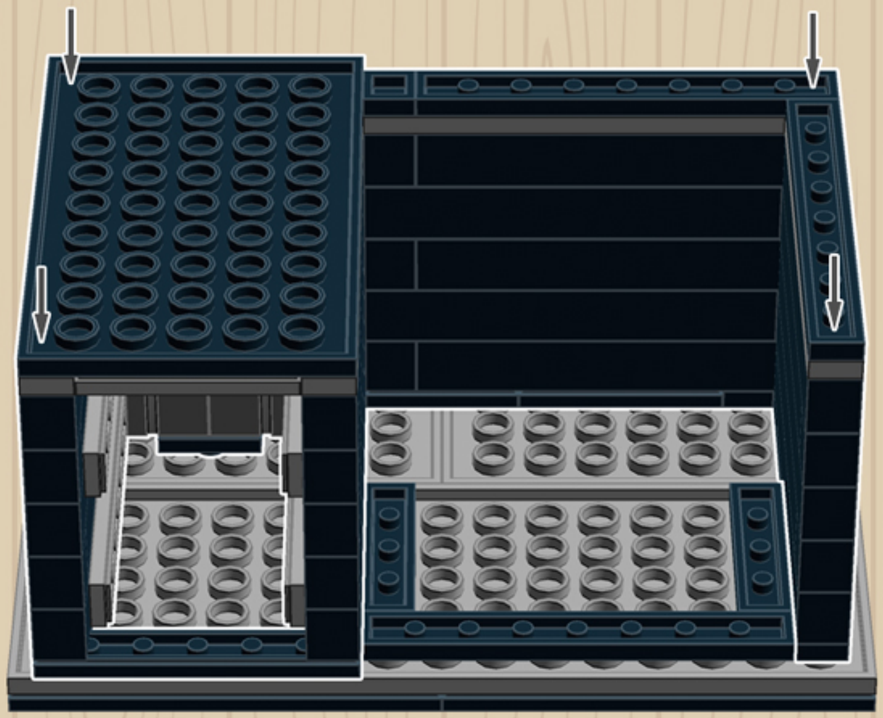

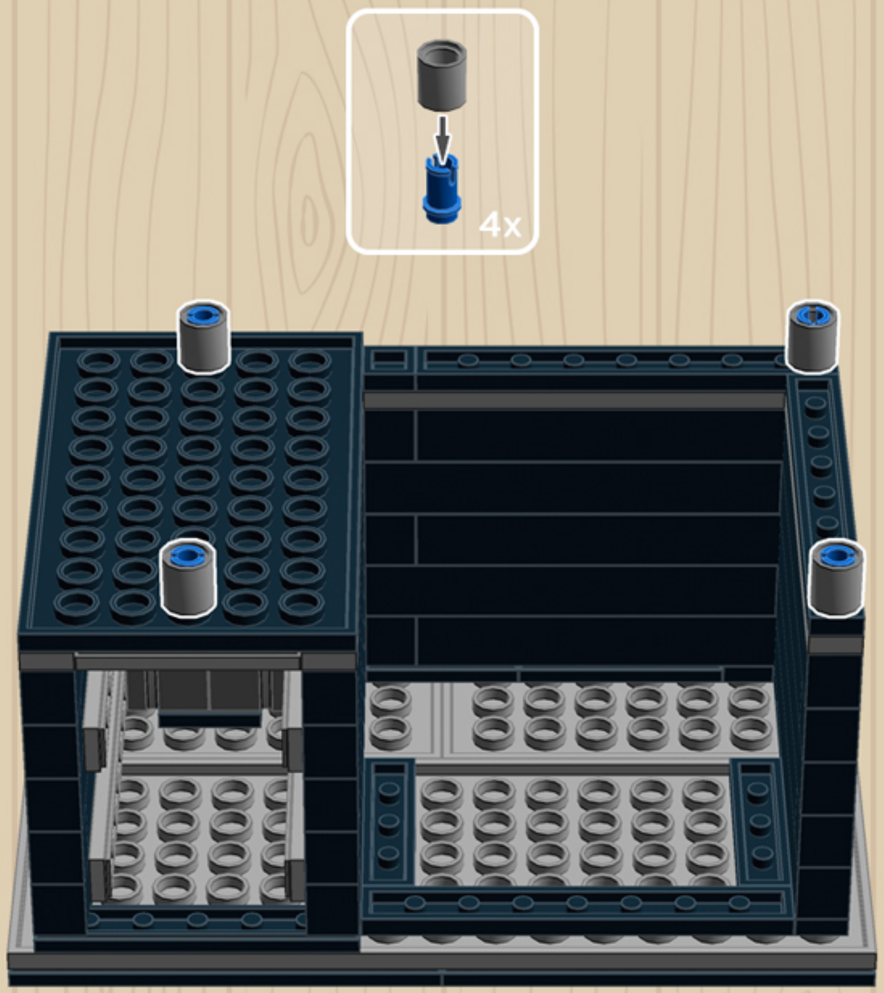
4x

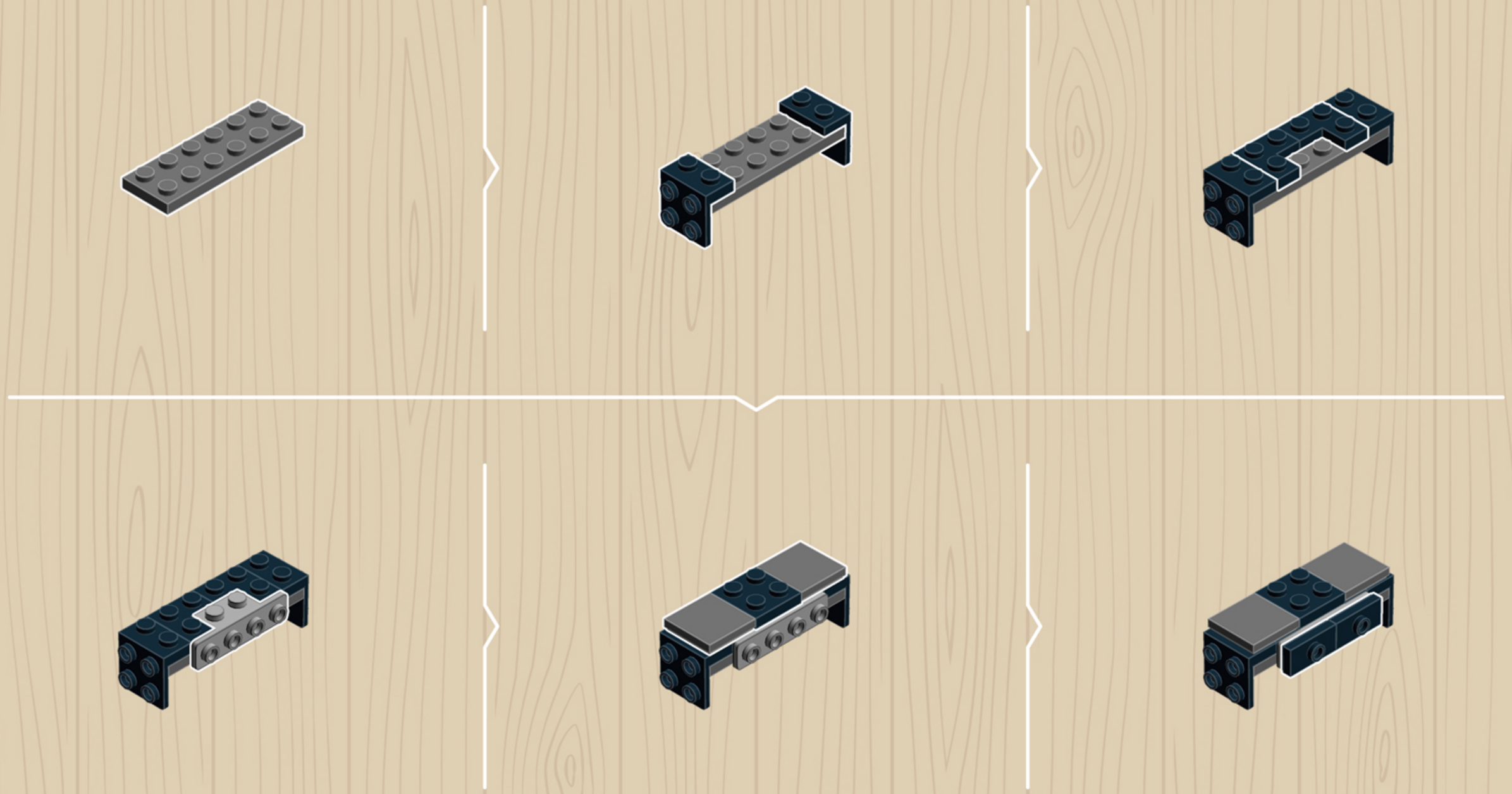

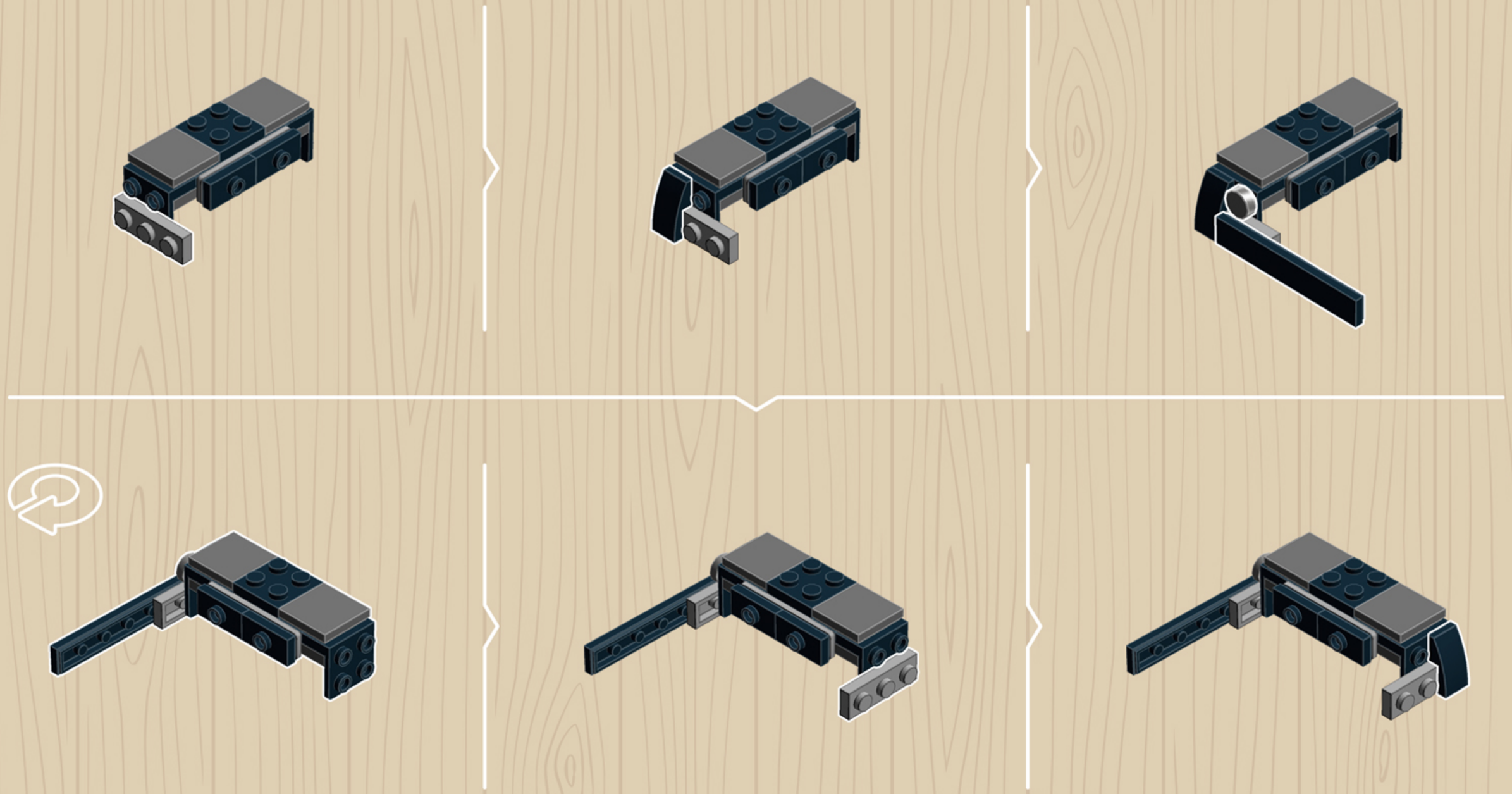

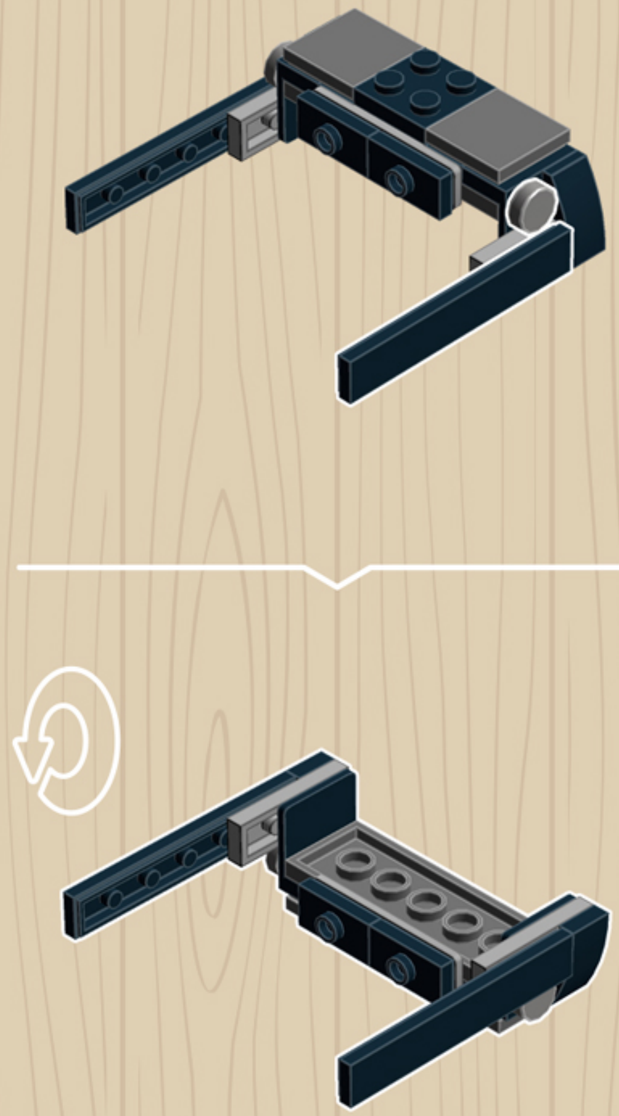

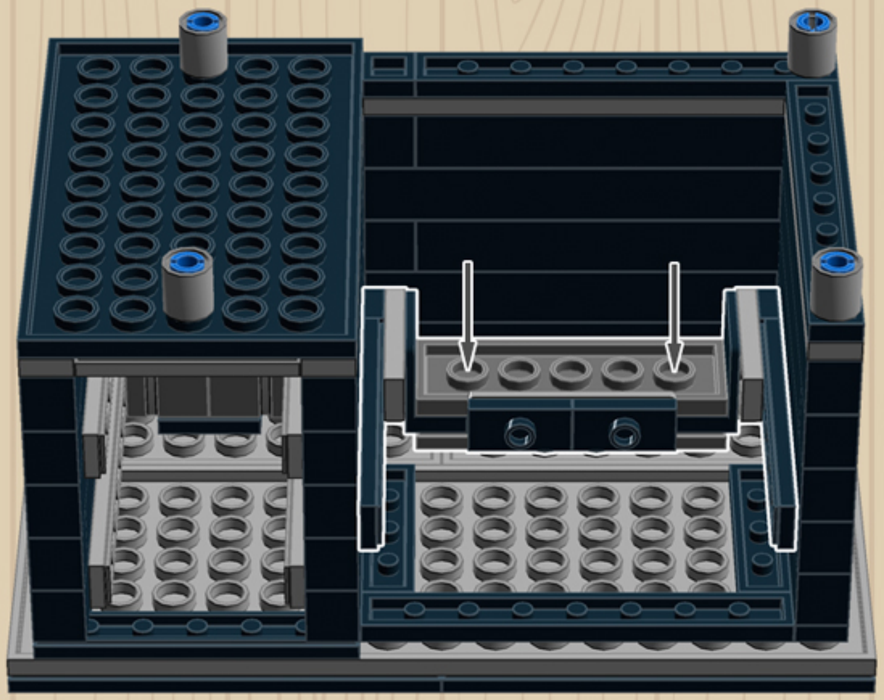

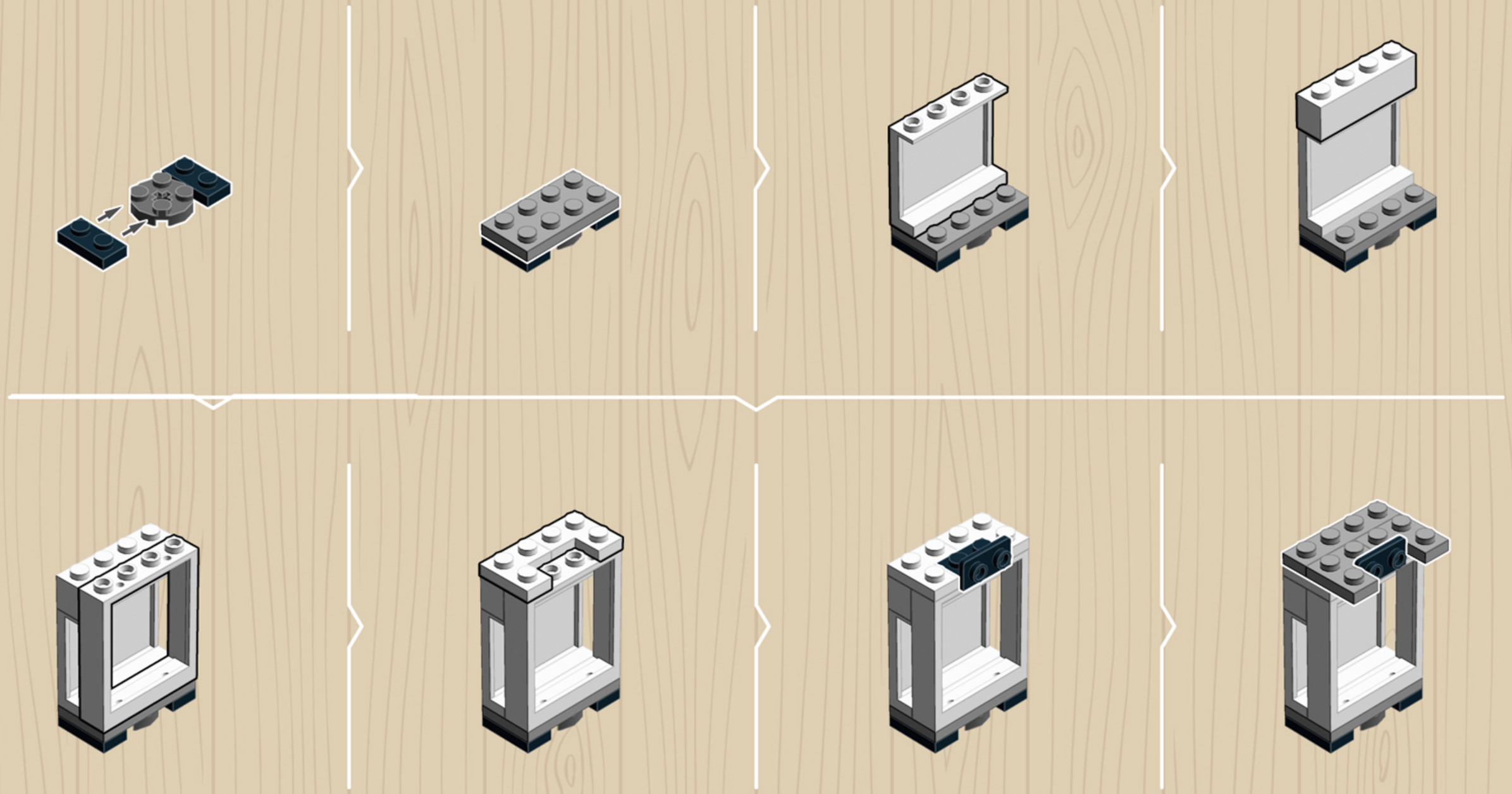

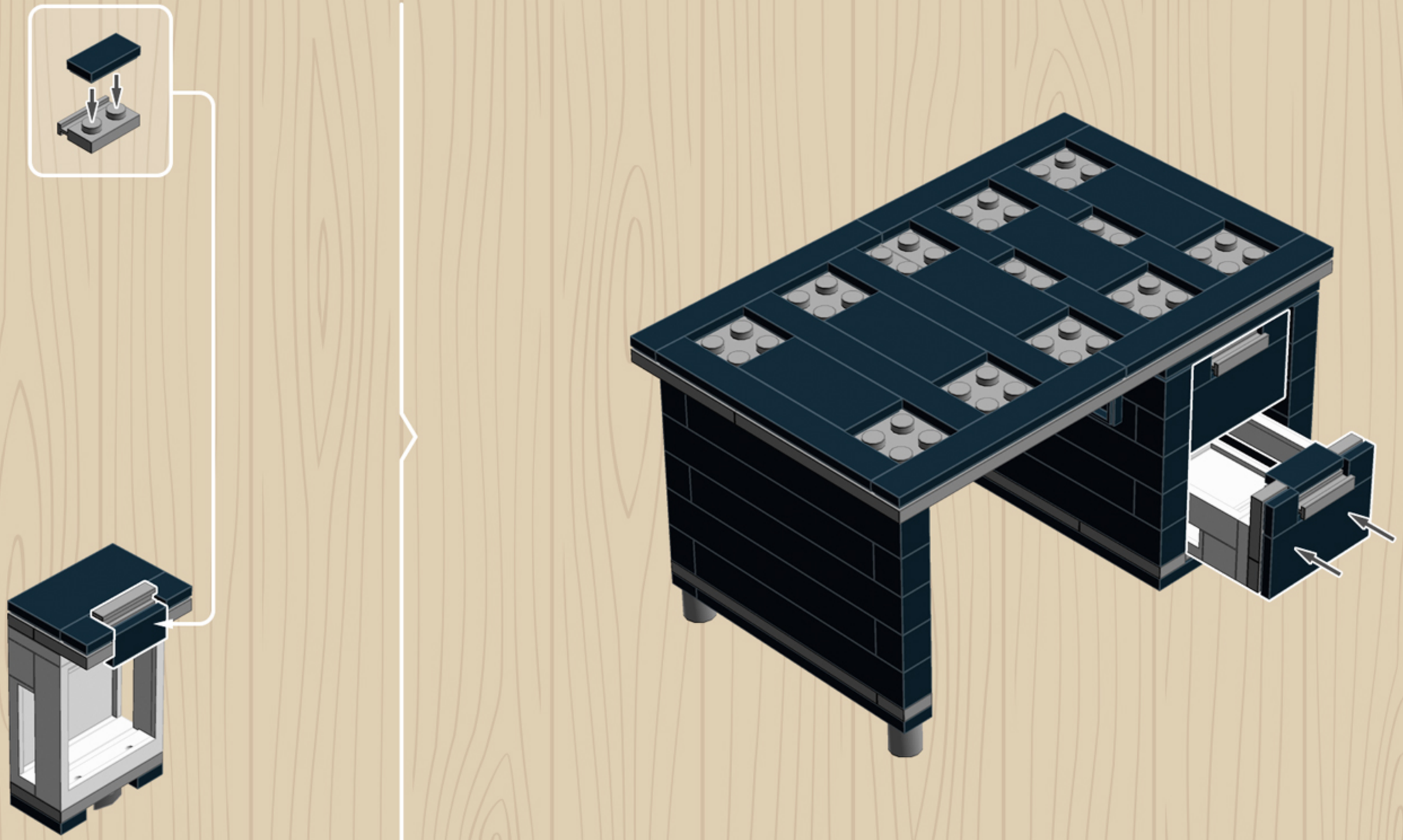

2x

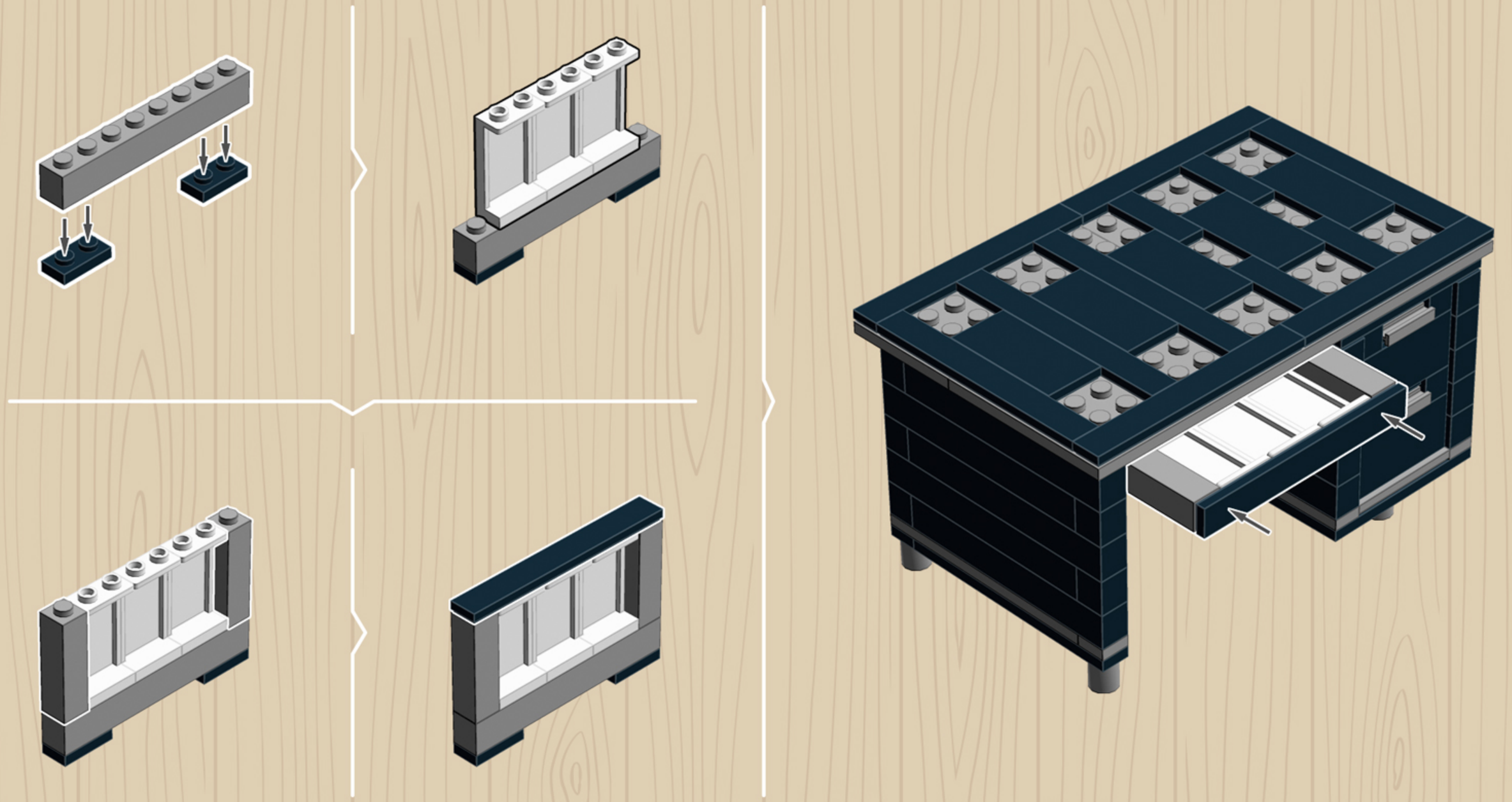

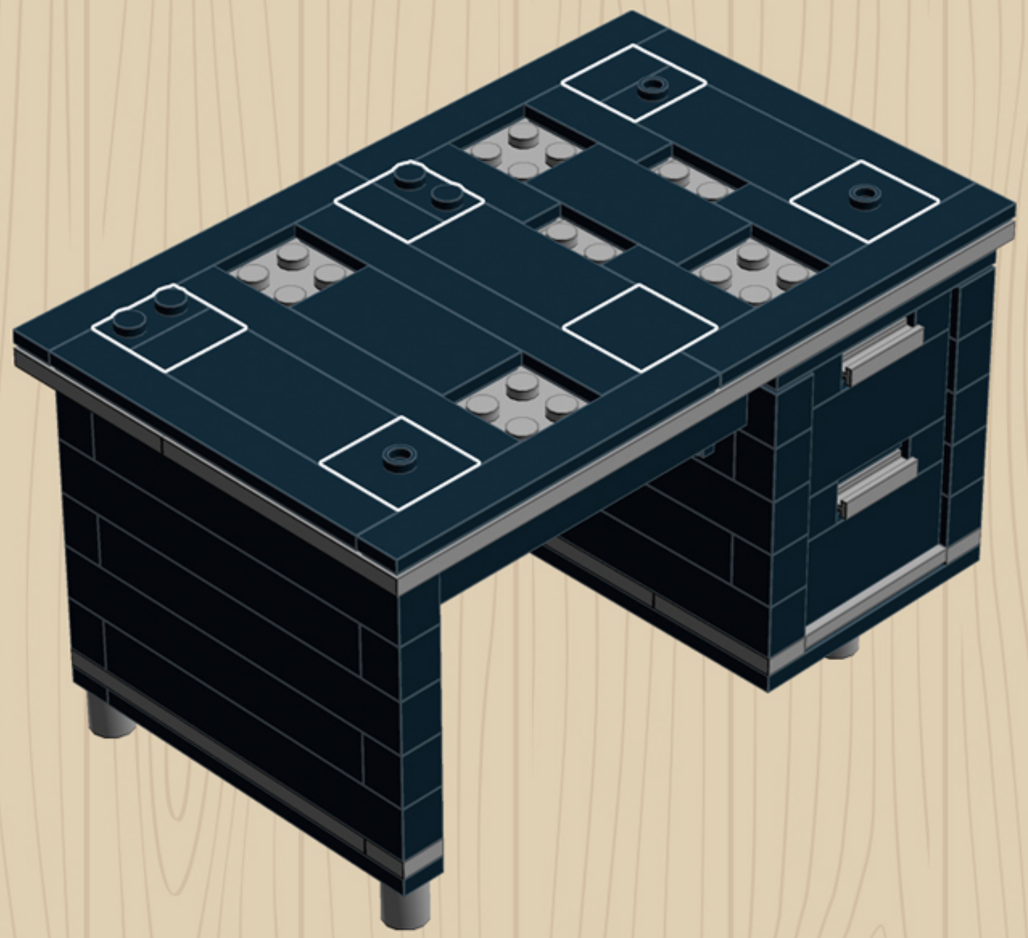

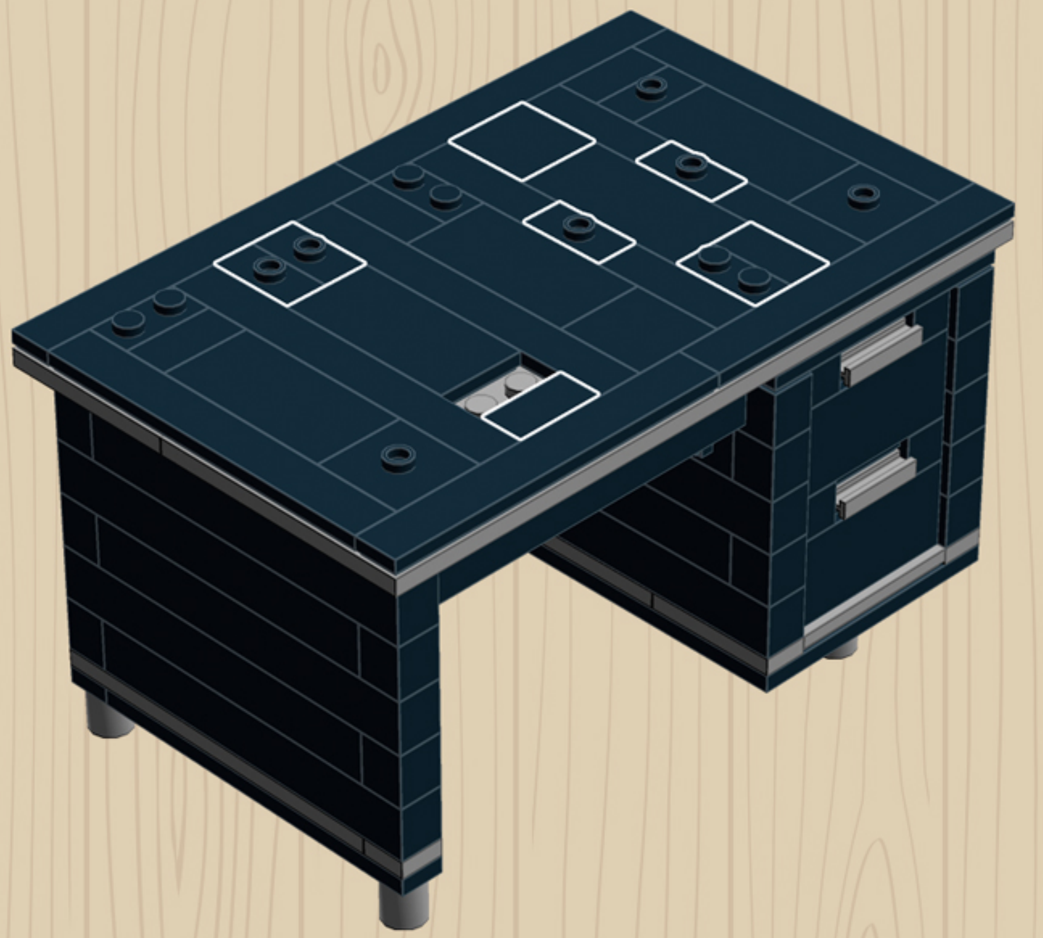

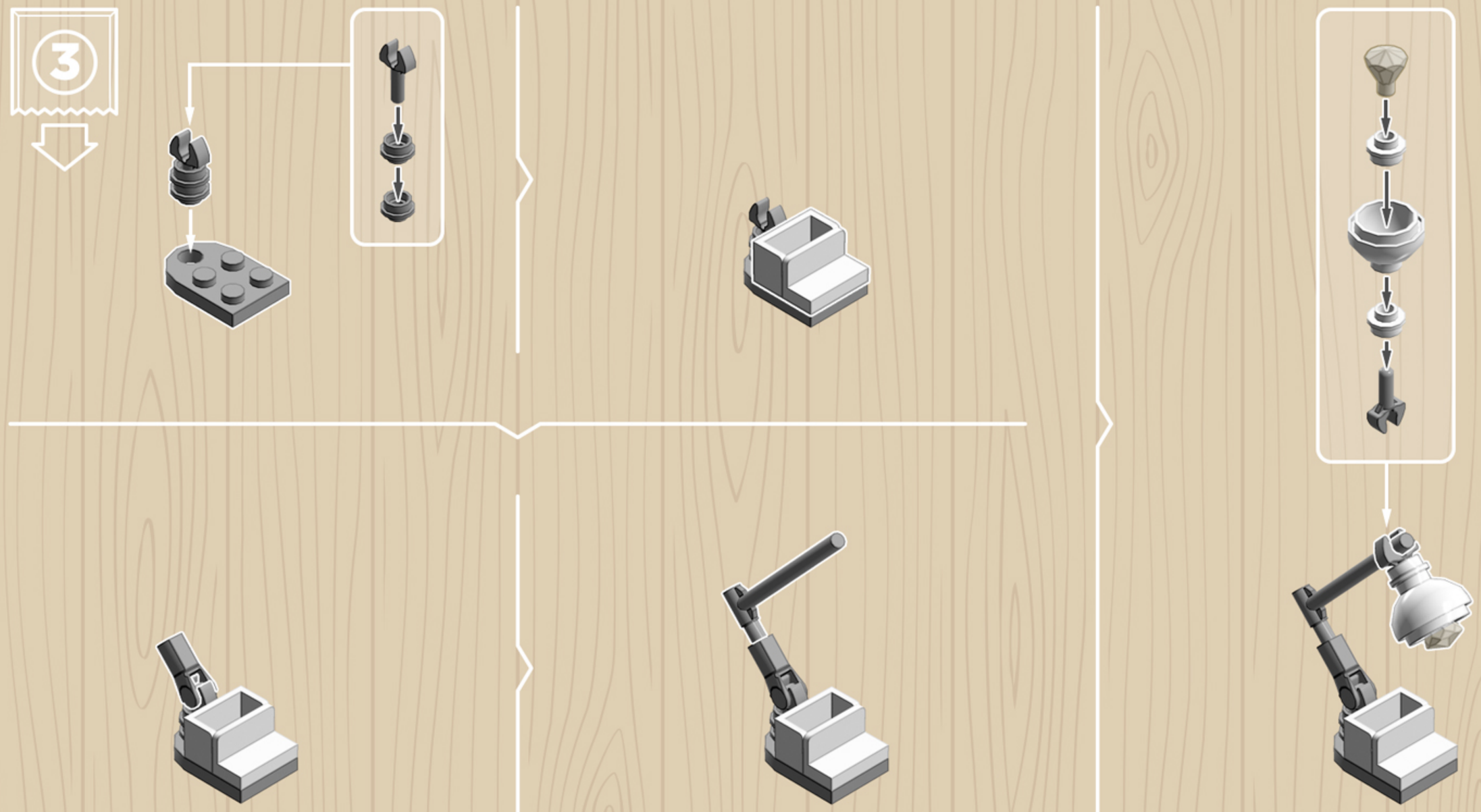
3

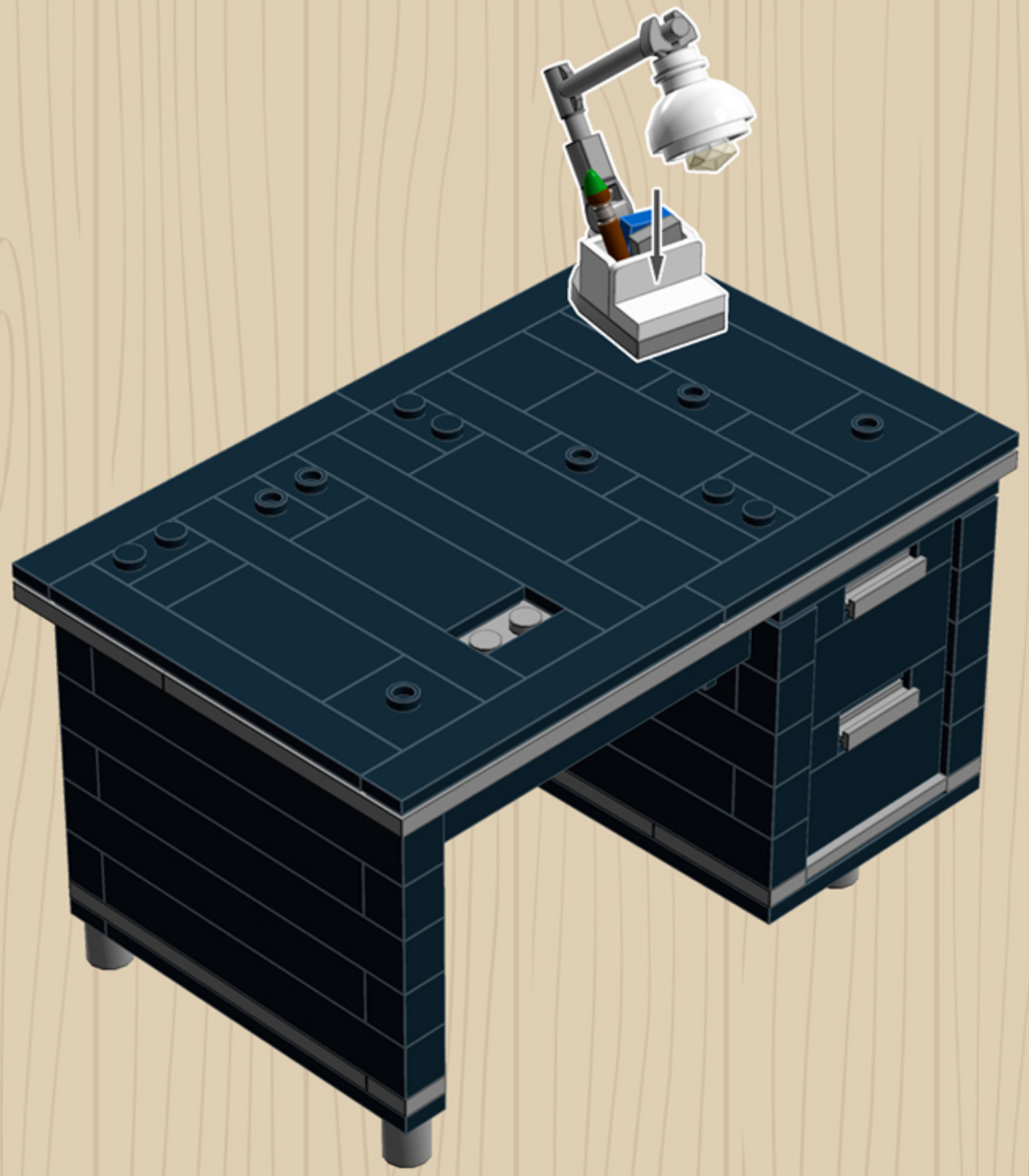

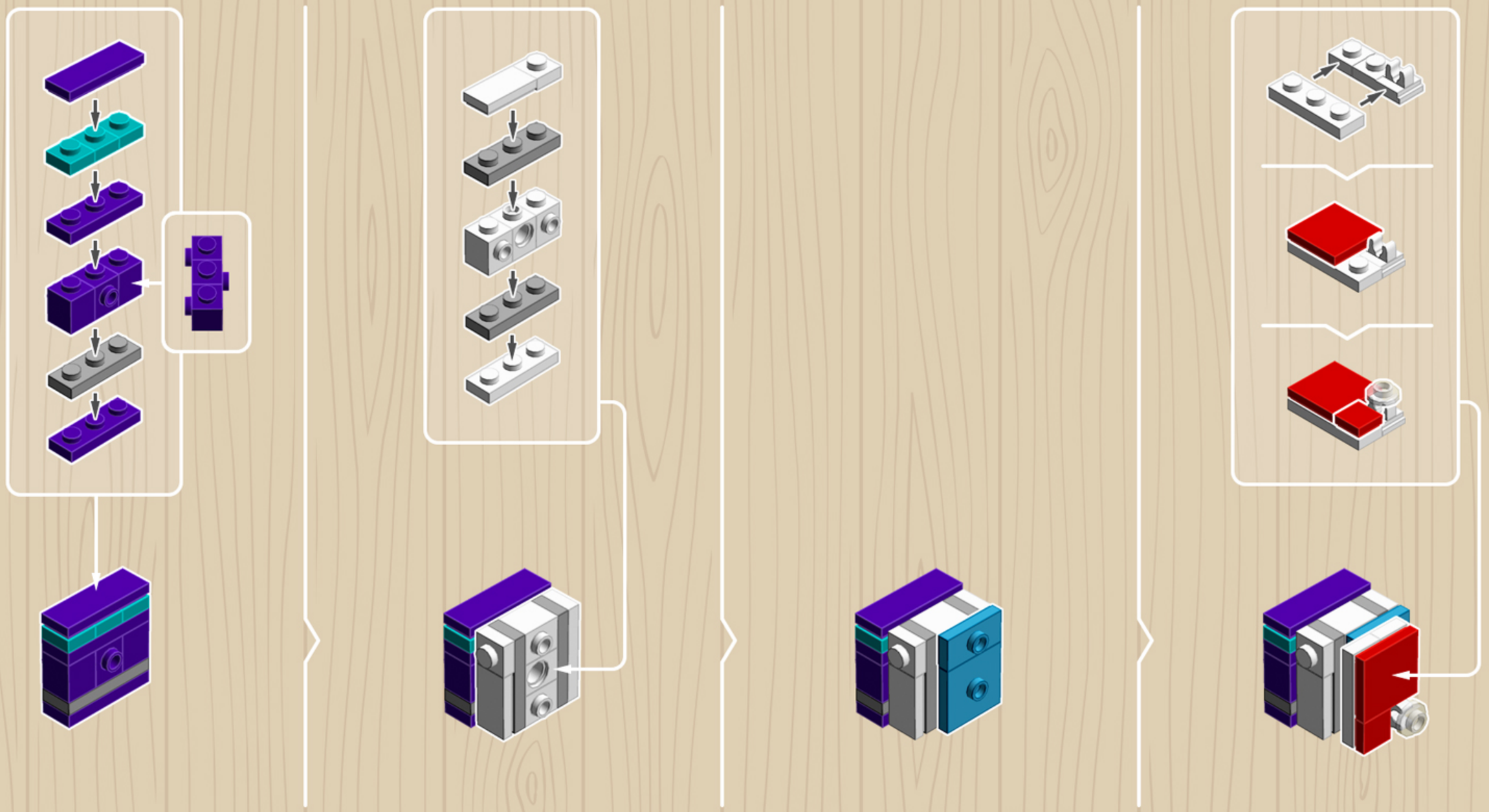

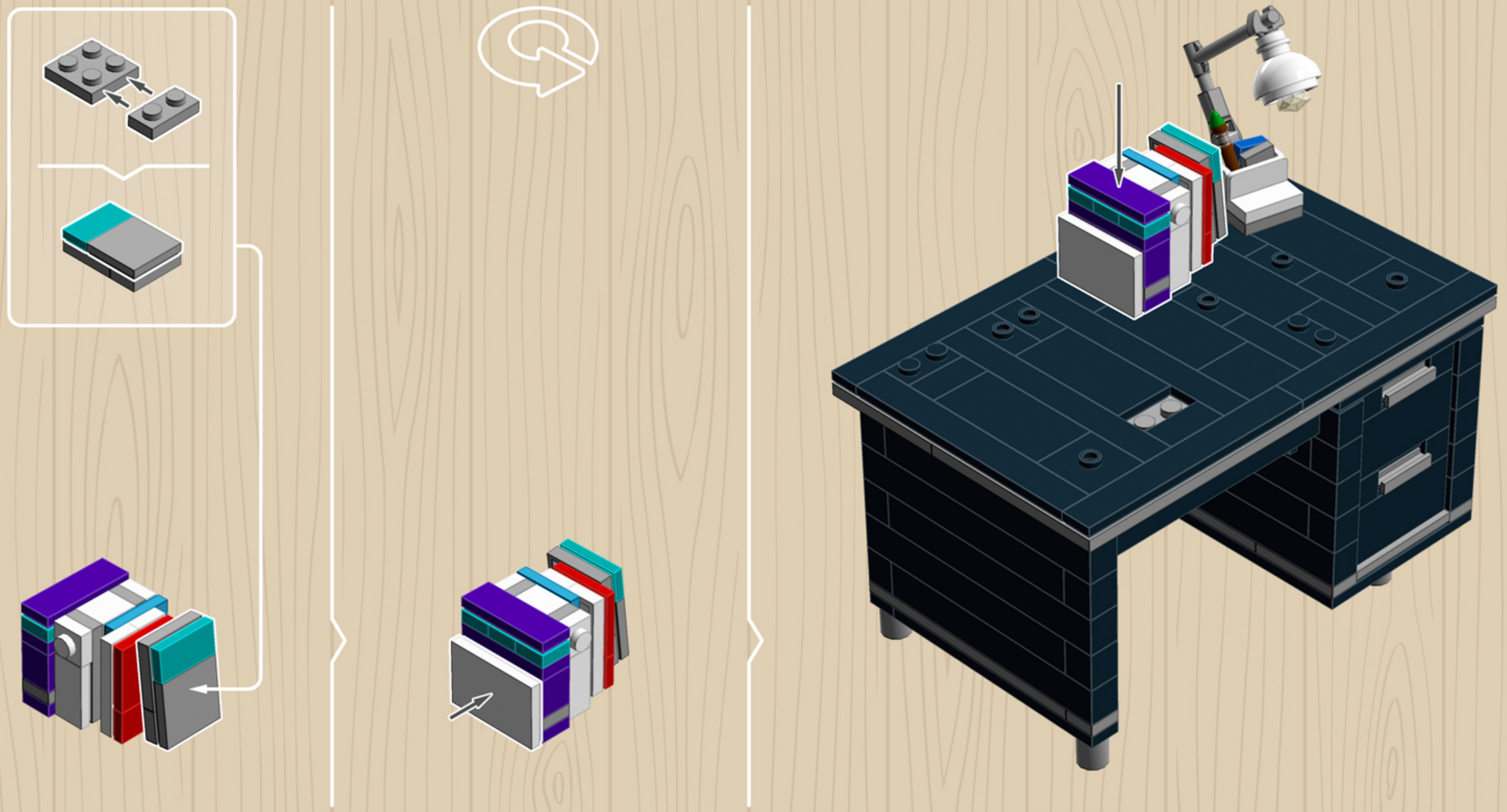

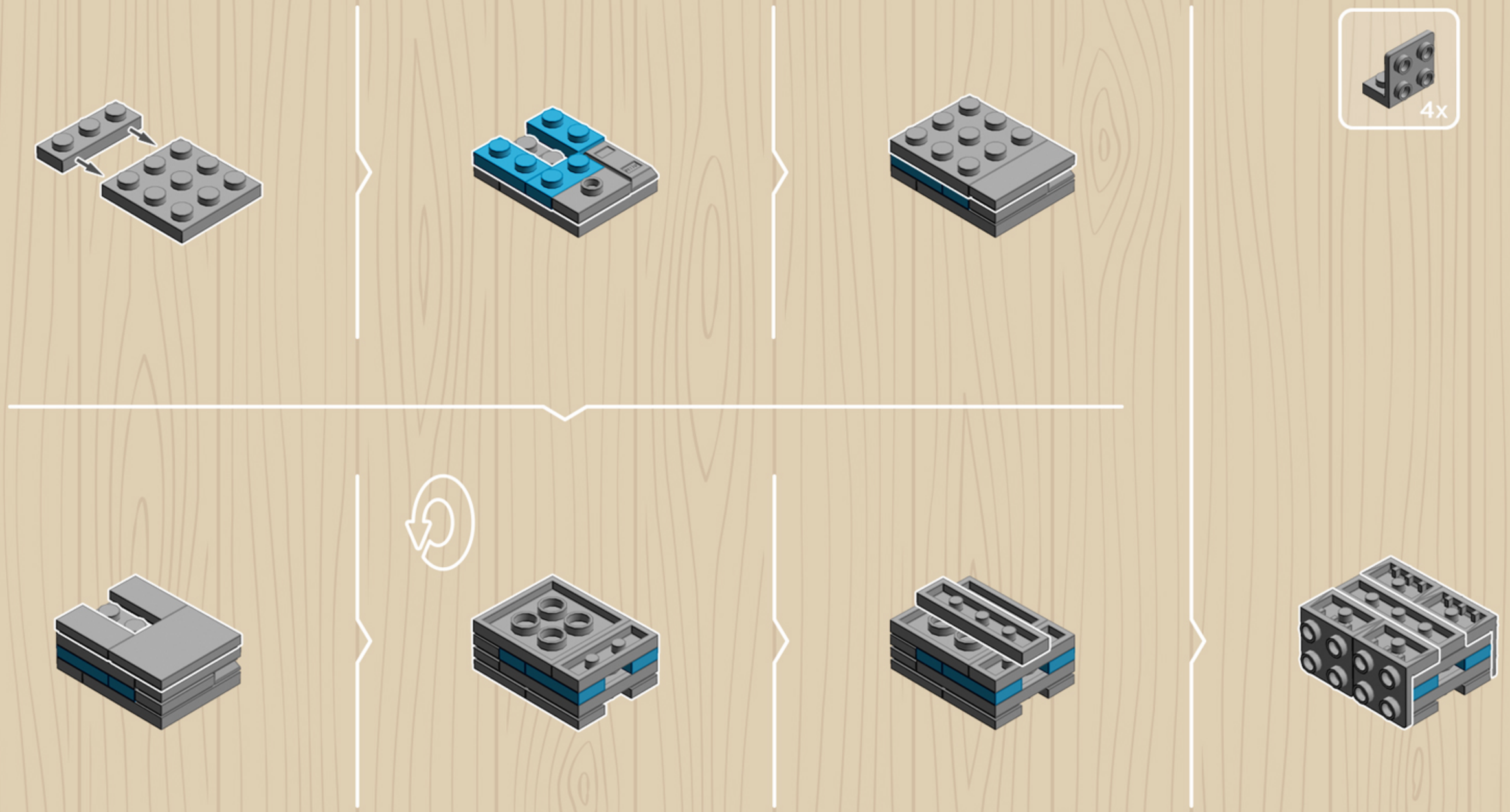
4x

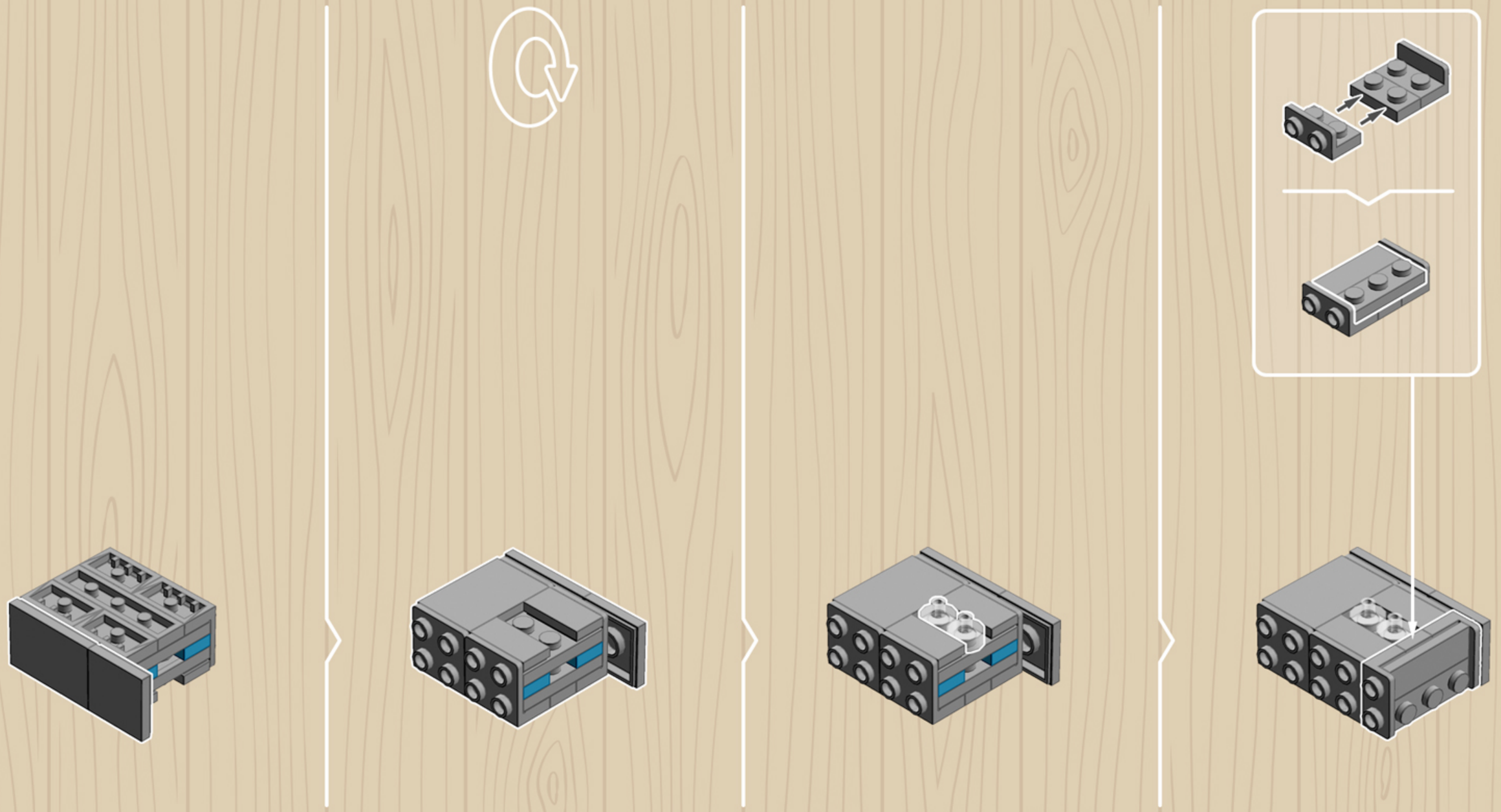

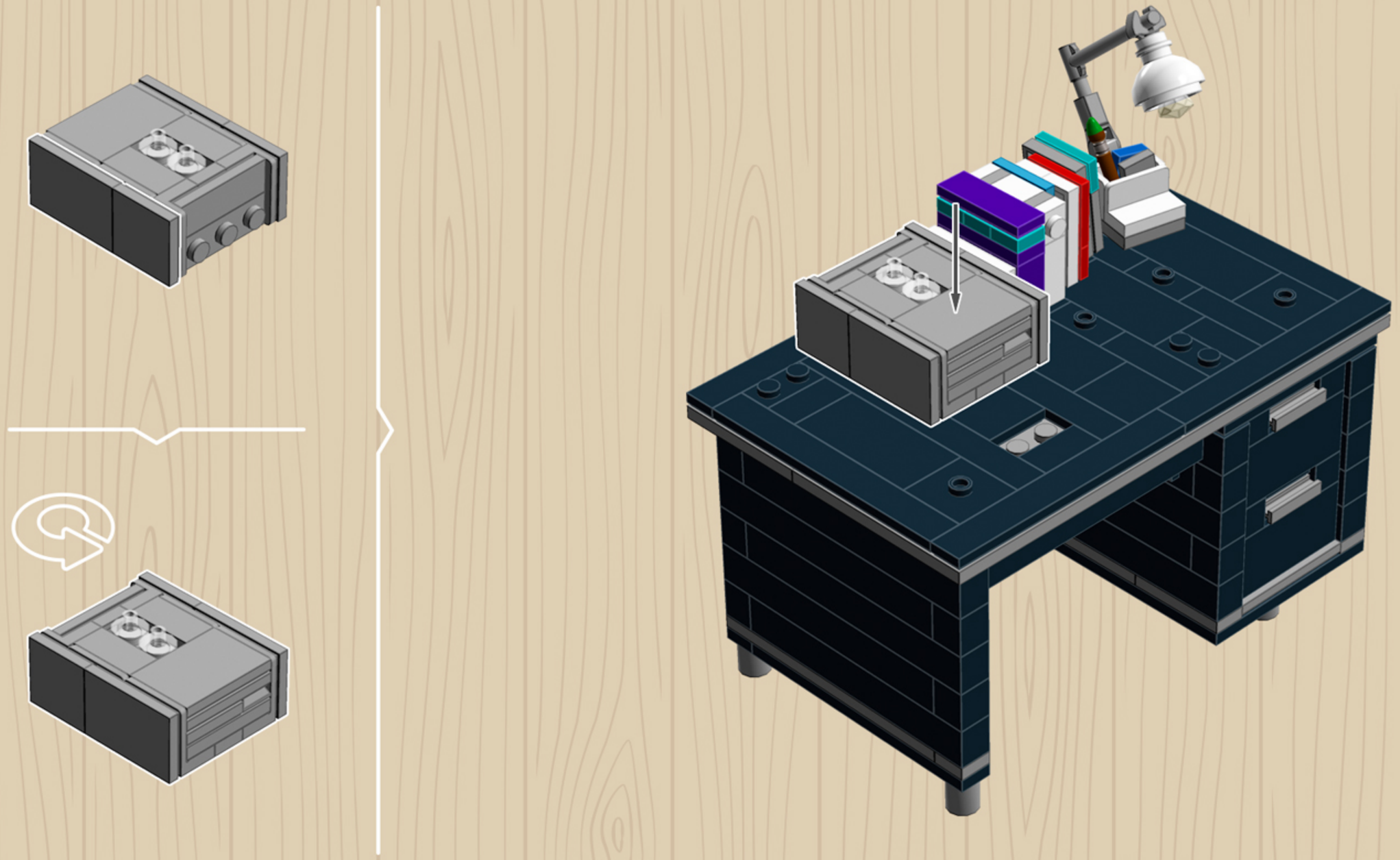

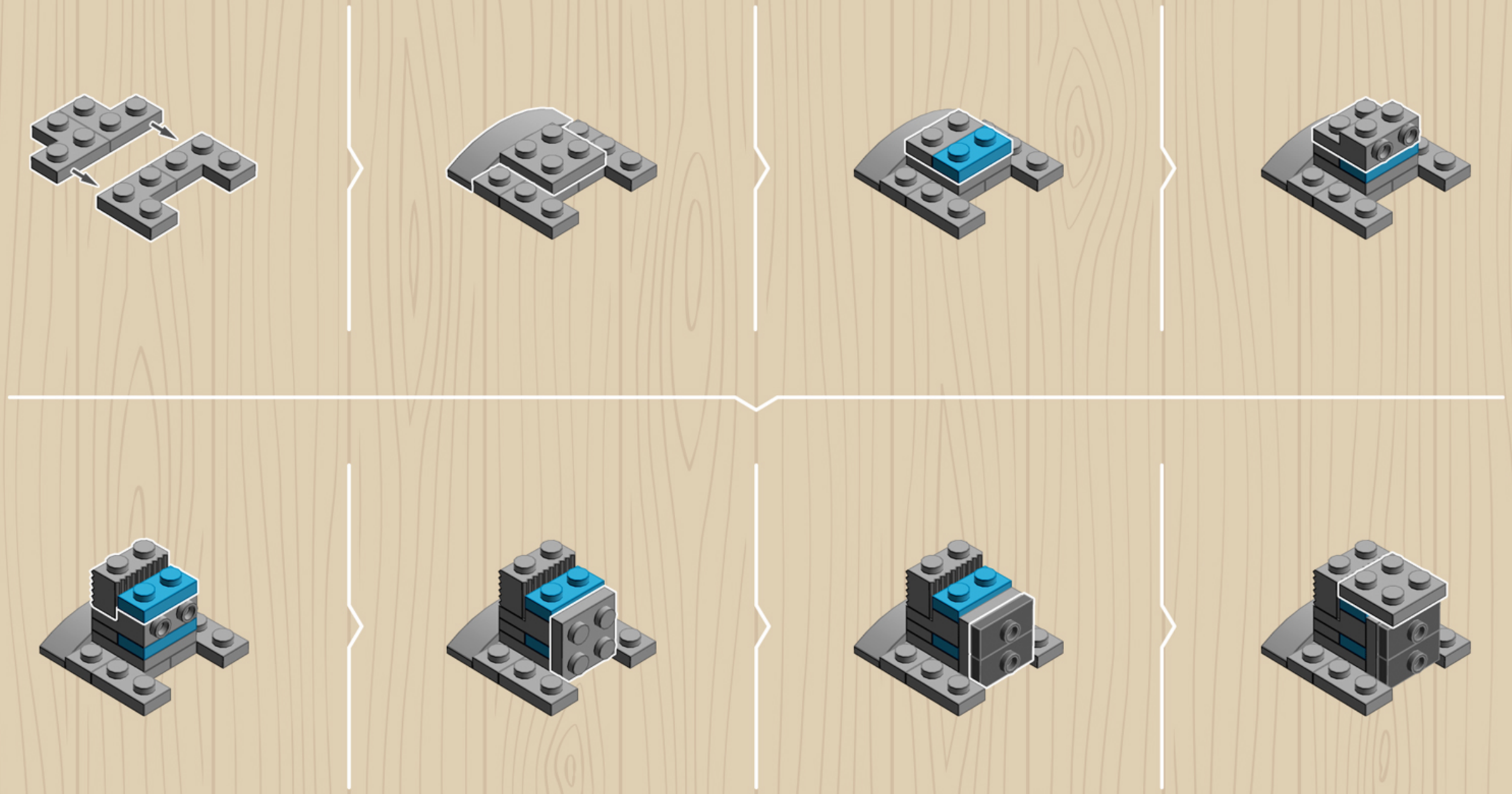

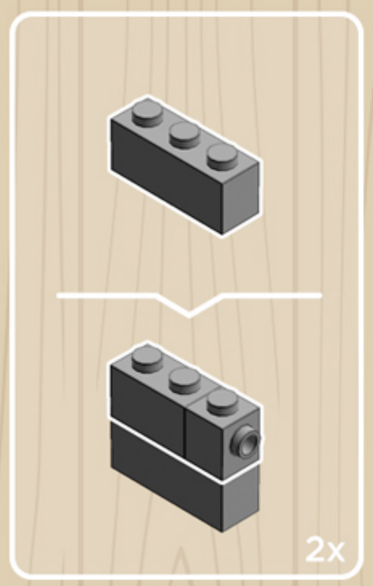
2x

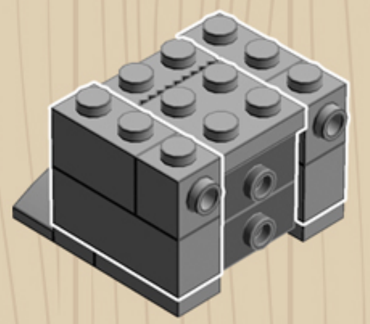

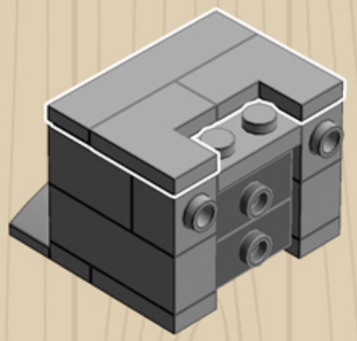

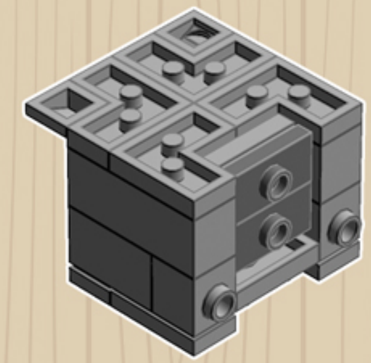

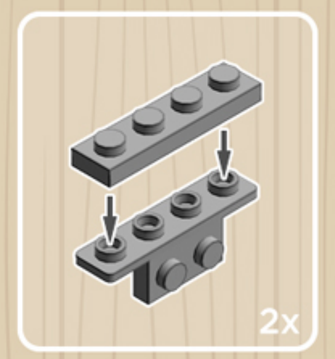
2x

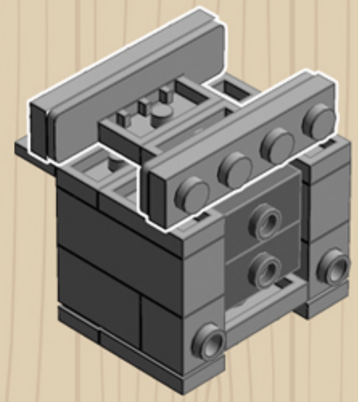

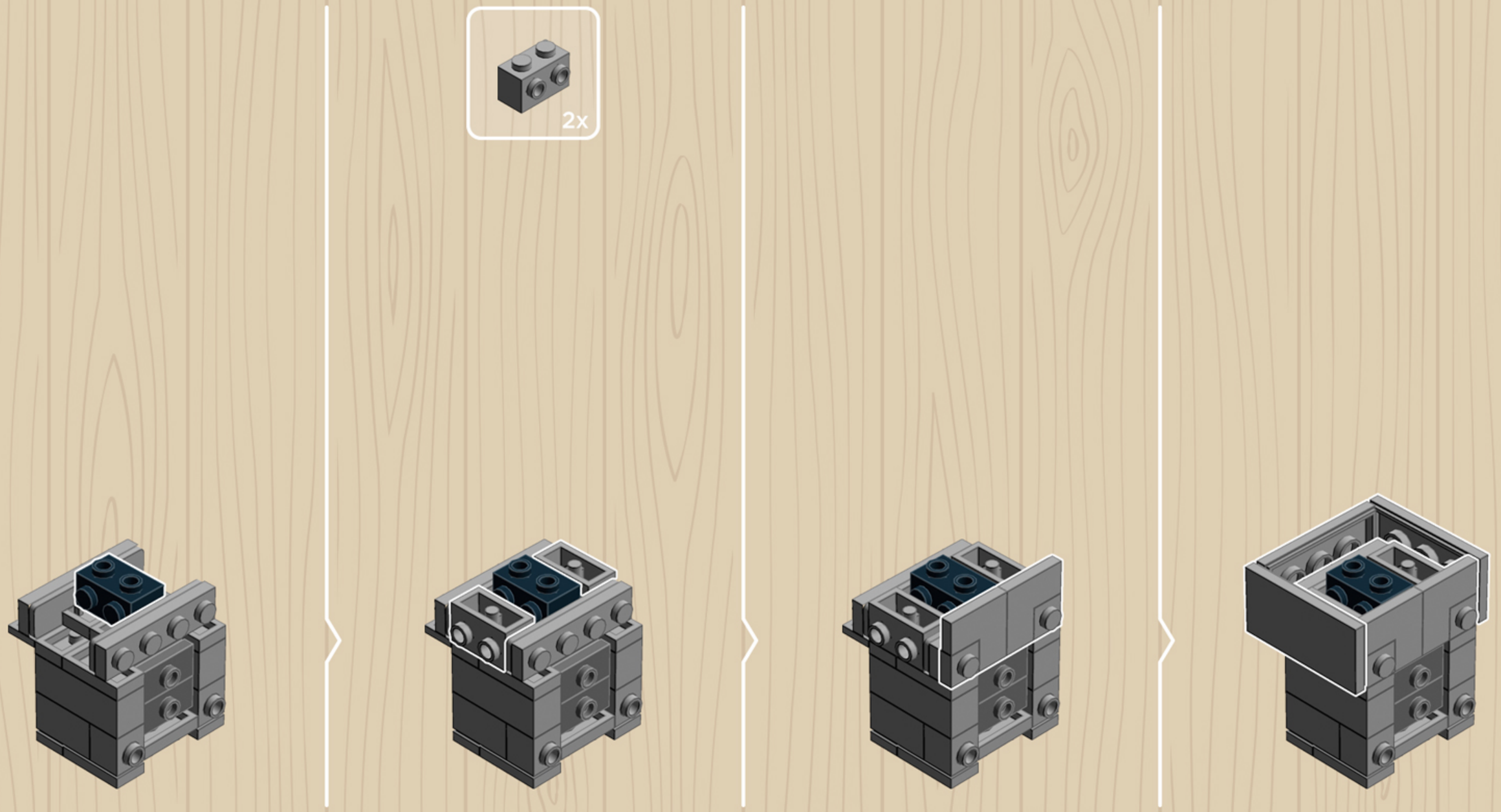
2x

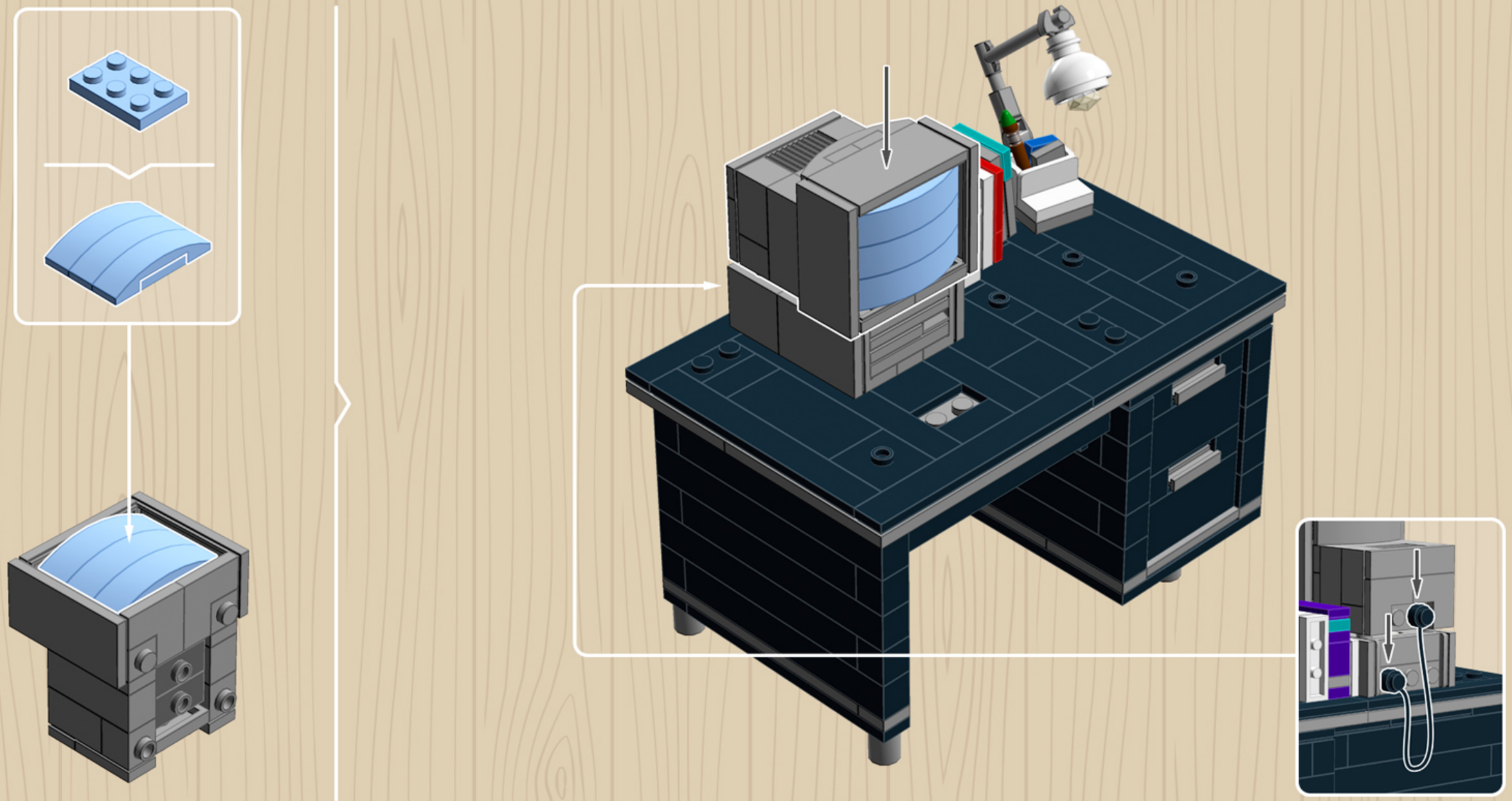

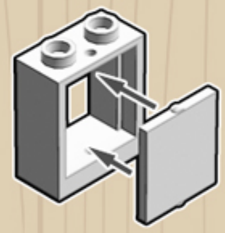

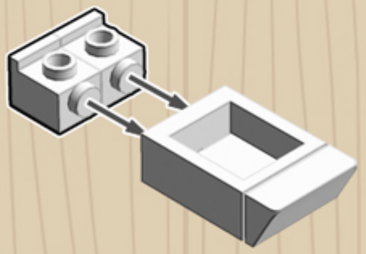

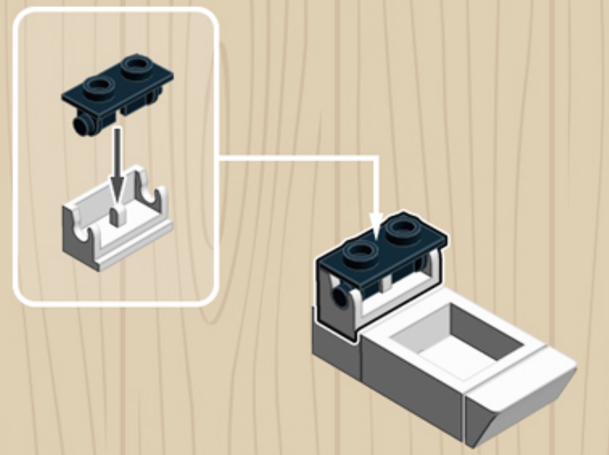

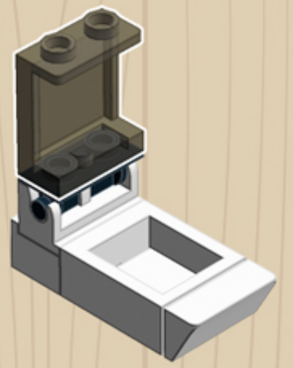

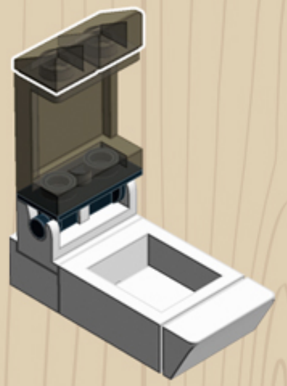

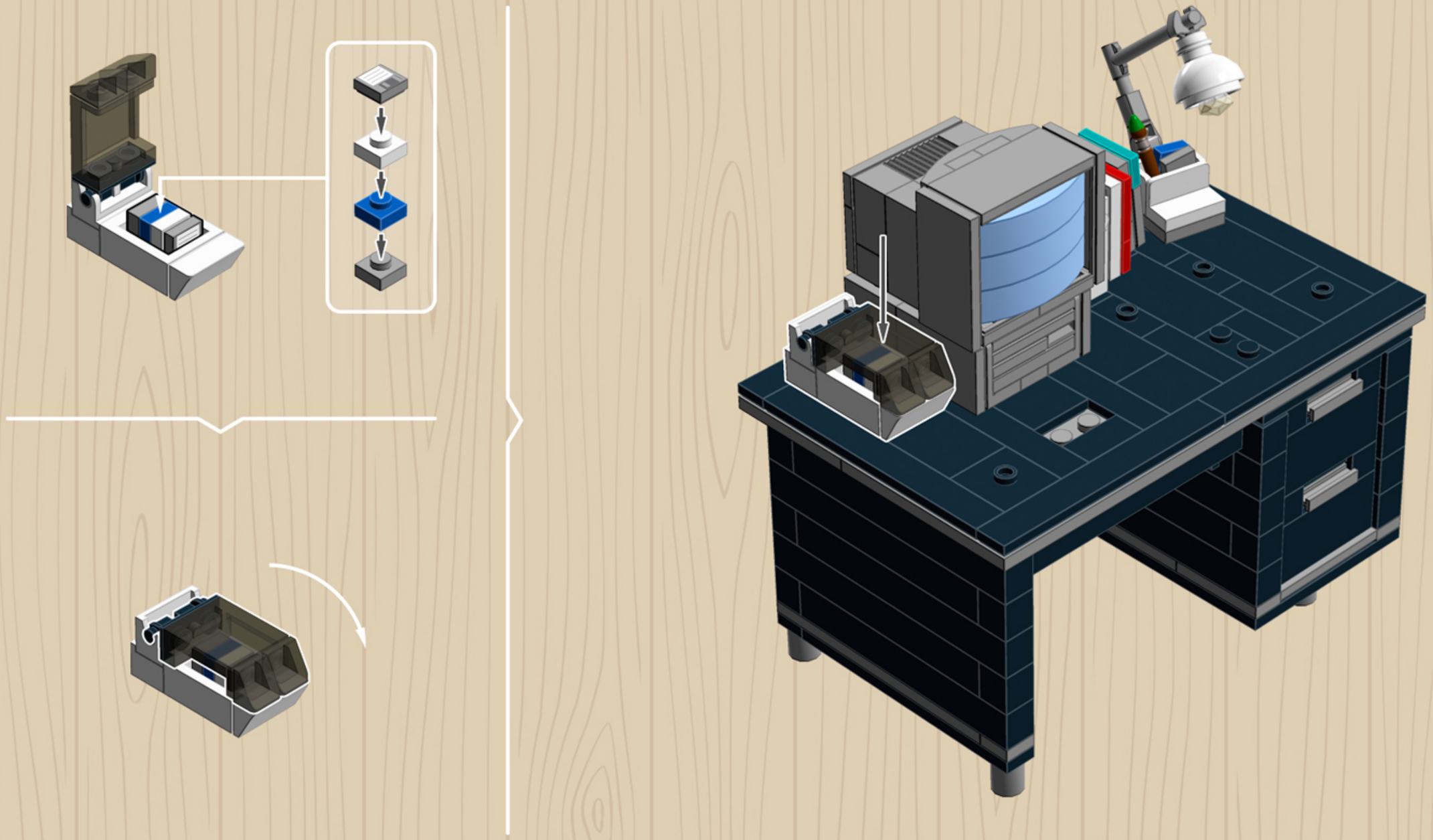

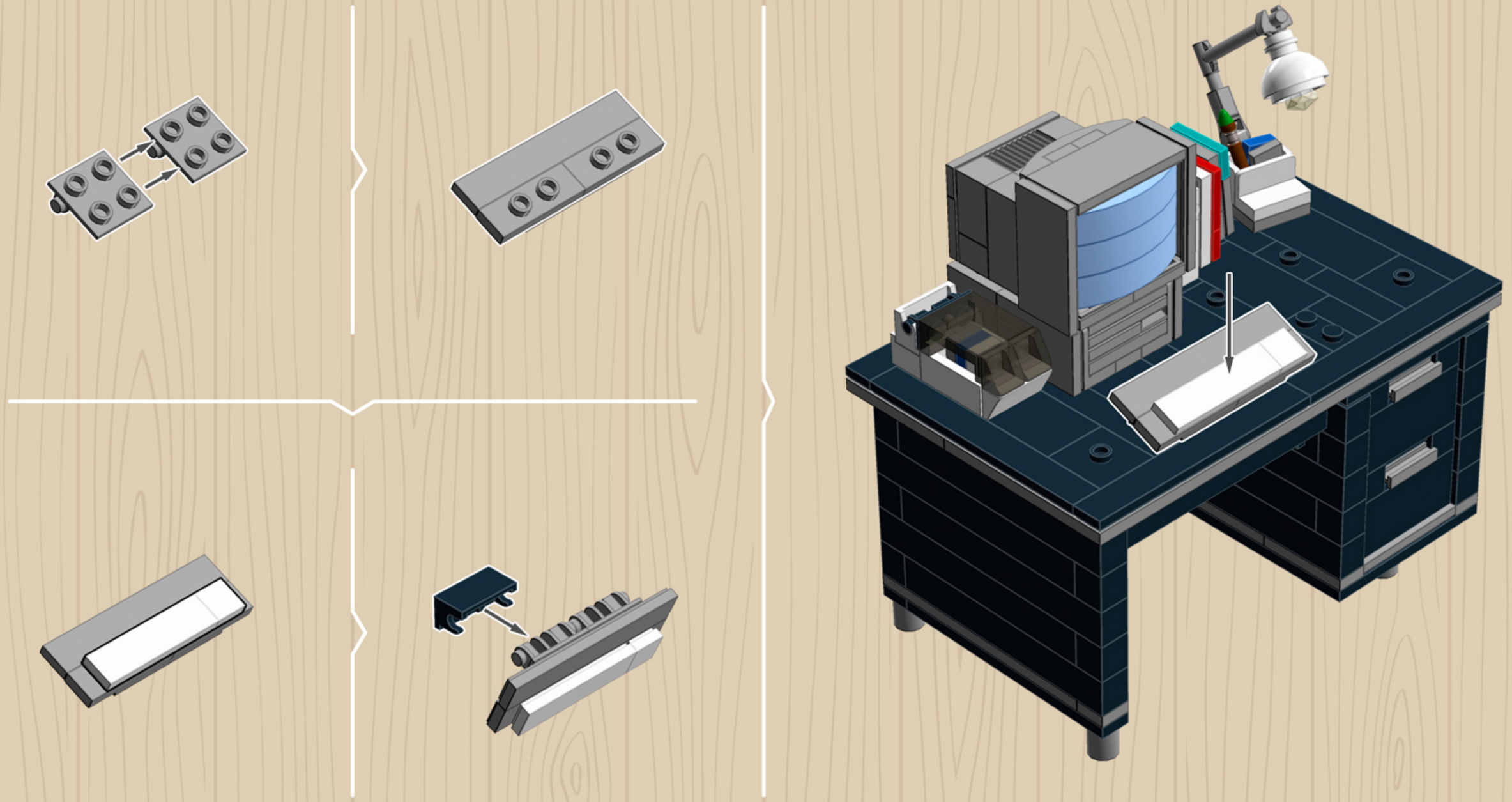

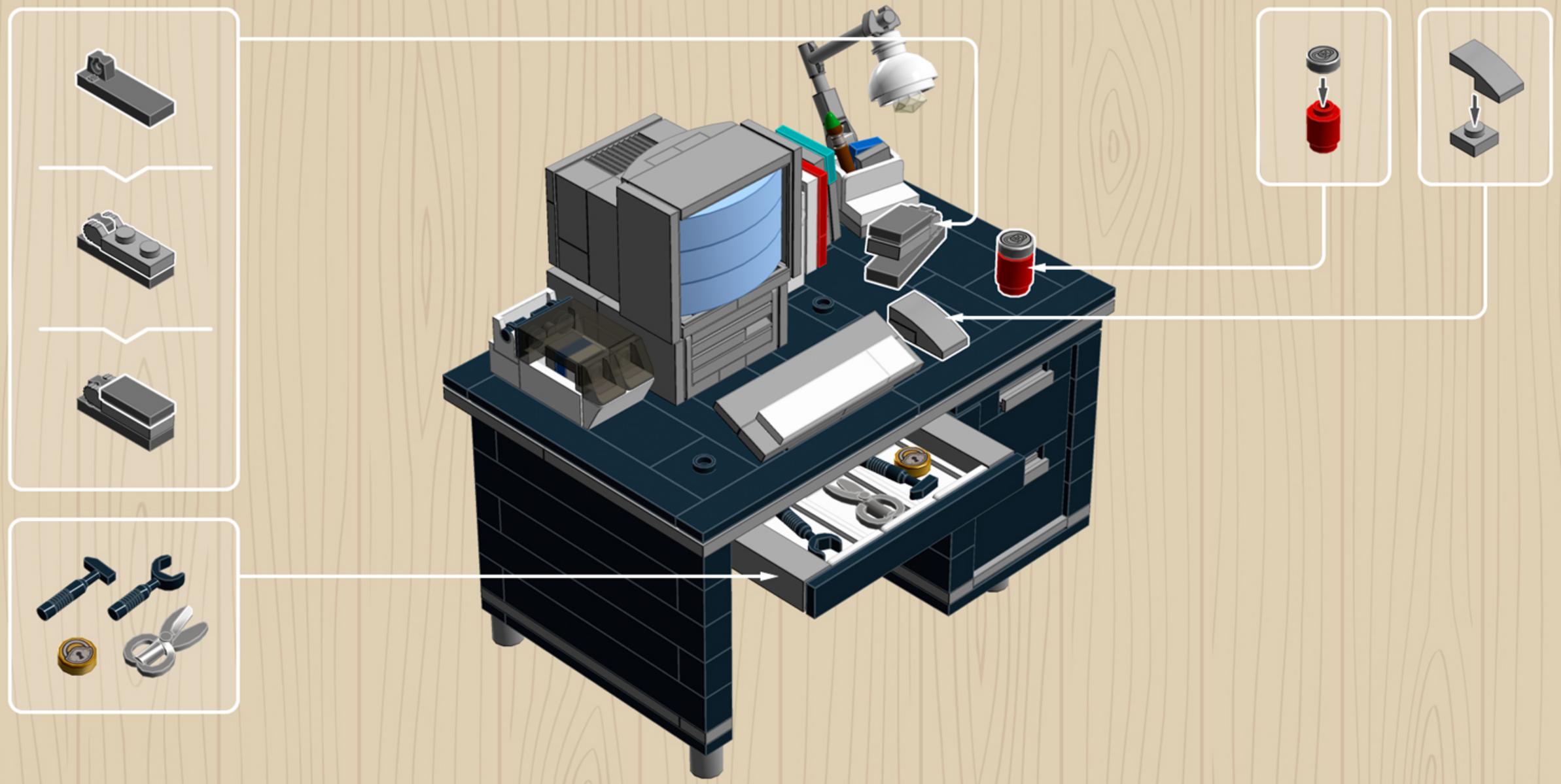

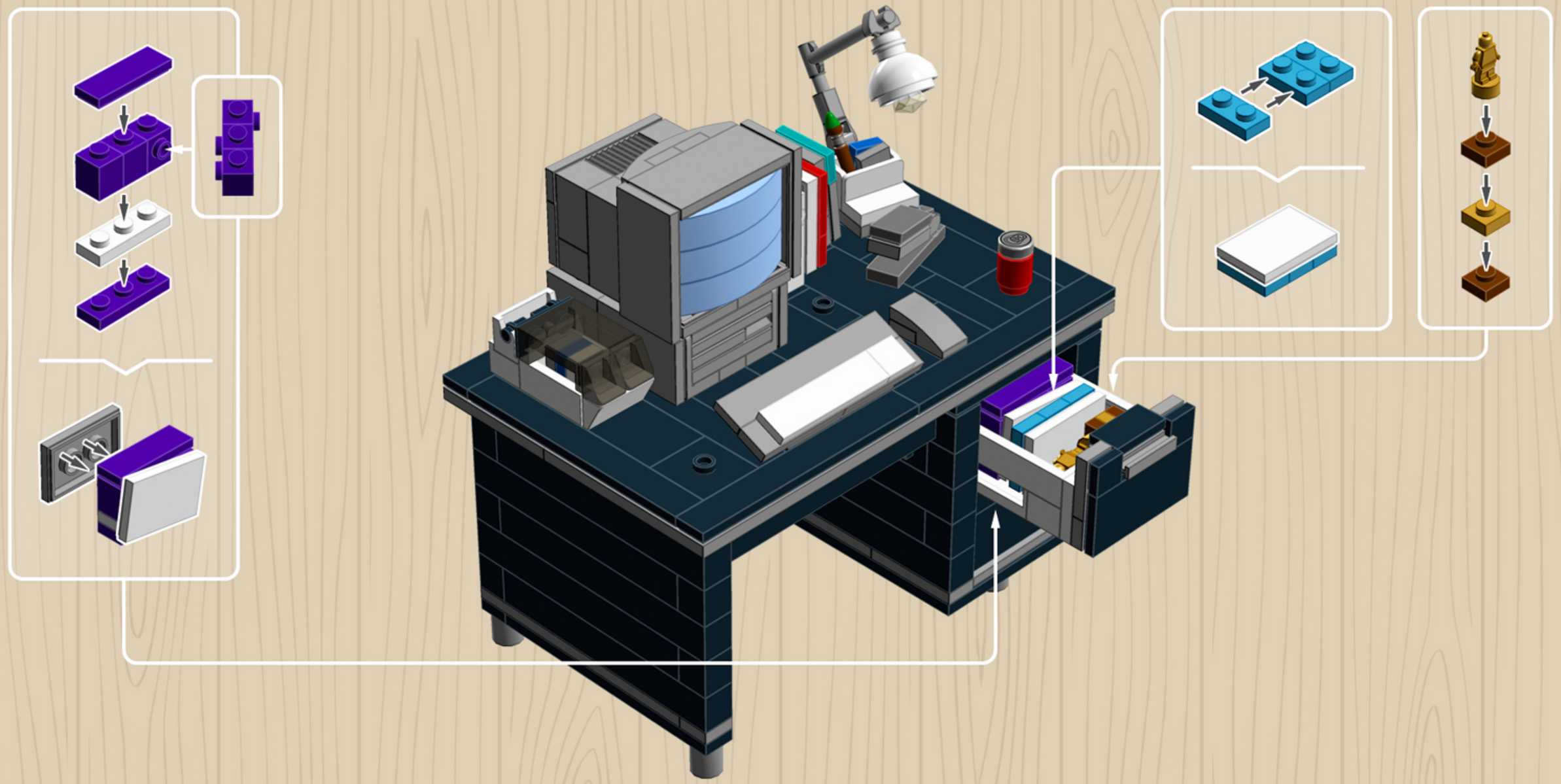

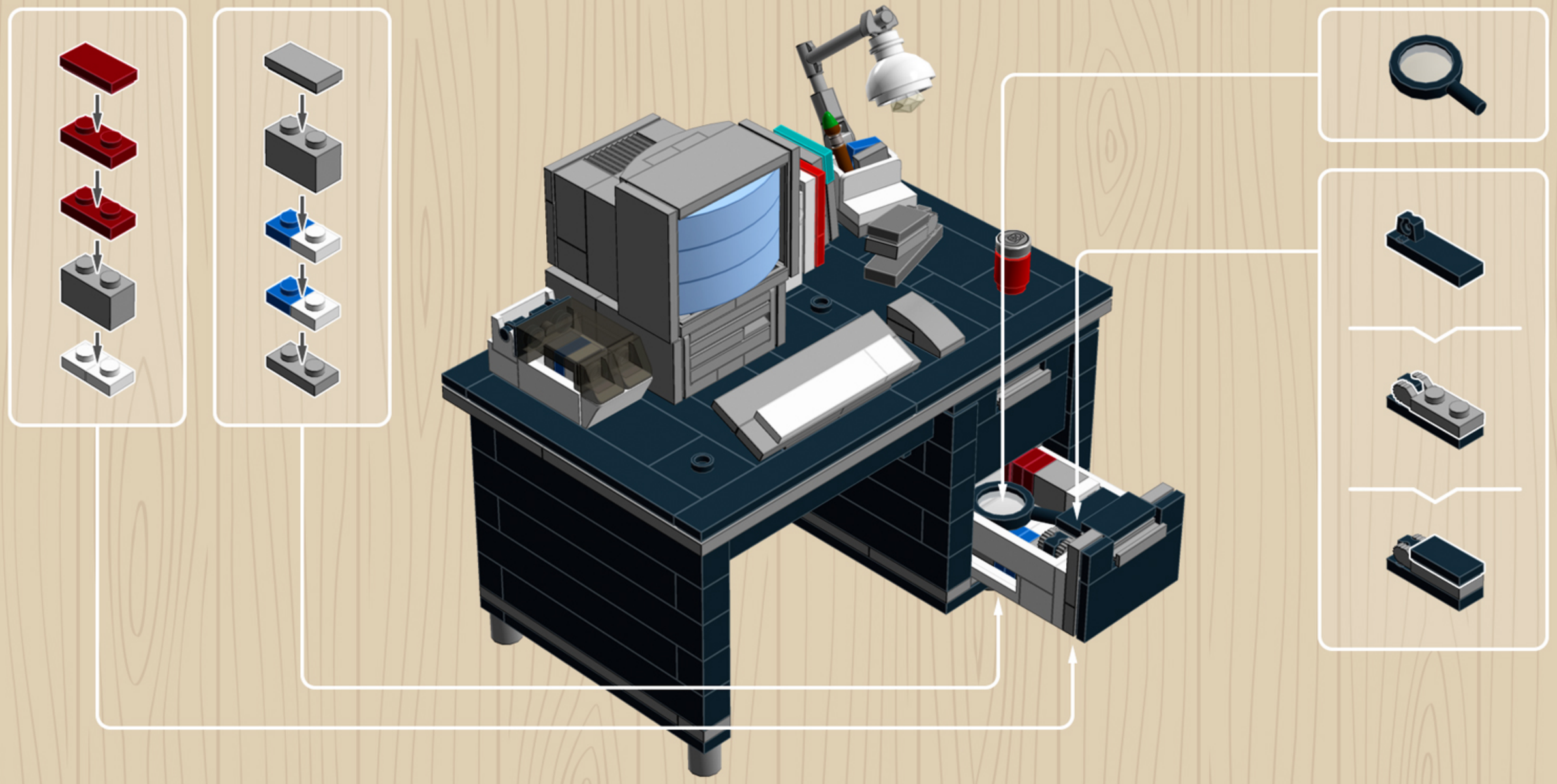

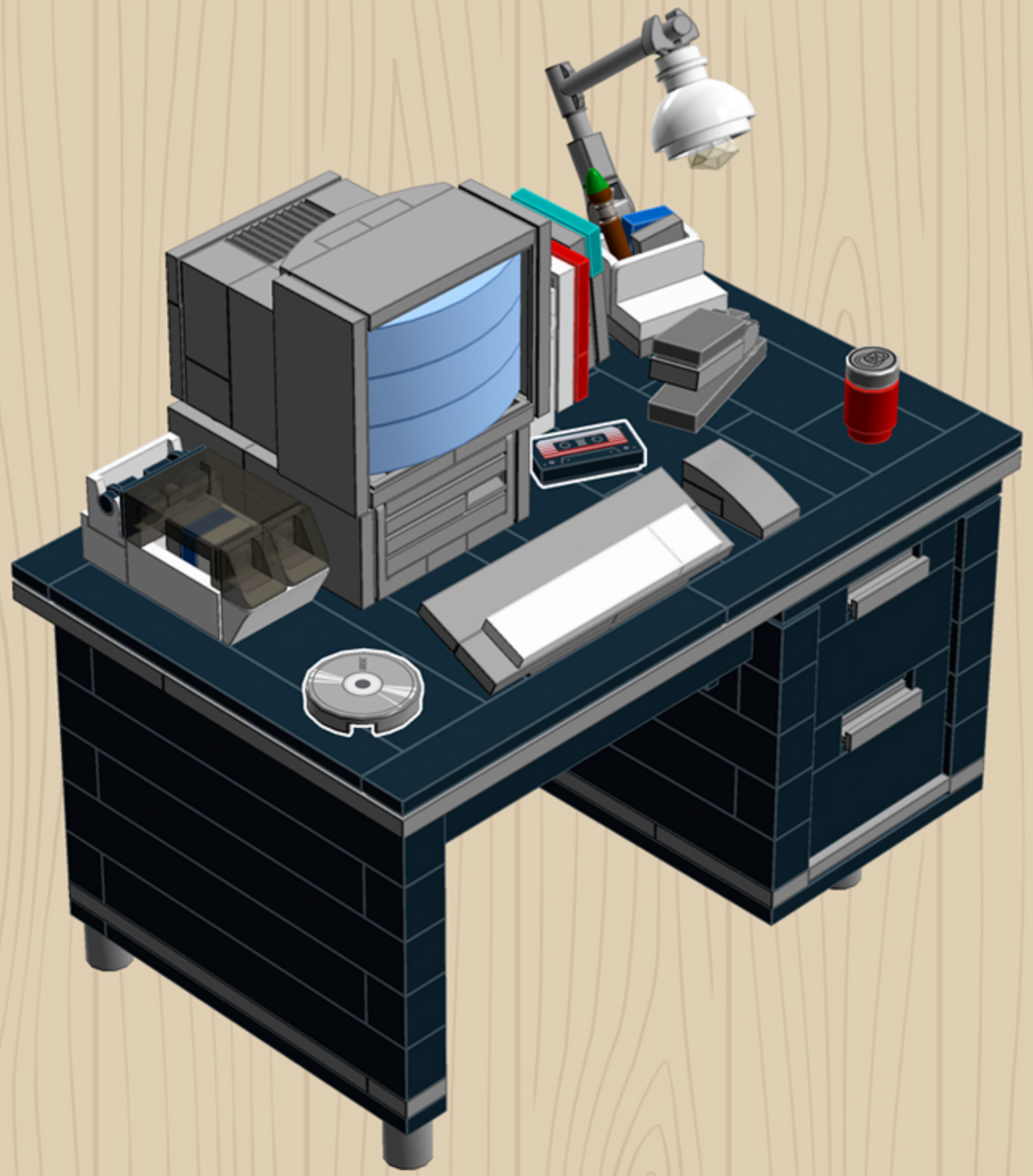

Office Chair building guides are available separately at chrismcveigh.com.

For more fun builds,
please stop by chrismcveigh.com,
visit me at facebook.com/c.mcveigh.photos,
or follow me on twitter @actionfigured

Purchase custom building kits at shop.chrismcveigh.com

These building guides are for personal use only. Unauthorized duplication, distribution and/or modification of these guides, in whole or in part, is strictly prohibited. The models contained within these guides are the copyright of Chris McVeigh, unless otherwise stated. Unauthorized reproduction of these models for resale, either in whole or as a building kit, is strictly prohibited.
© 2018 CHRIS MCVEIGH
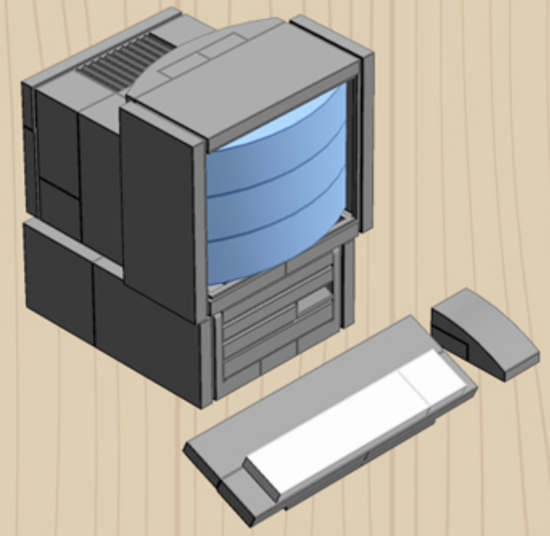
LEGO is a registered trademark of The LEGO Group.