MODULAR Arcade

CORNER UNIT

A LEGO® project by Chris McVeigh

chrismcveigh.com

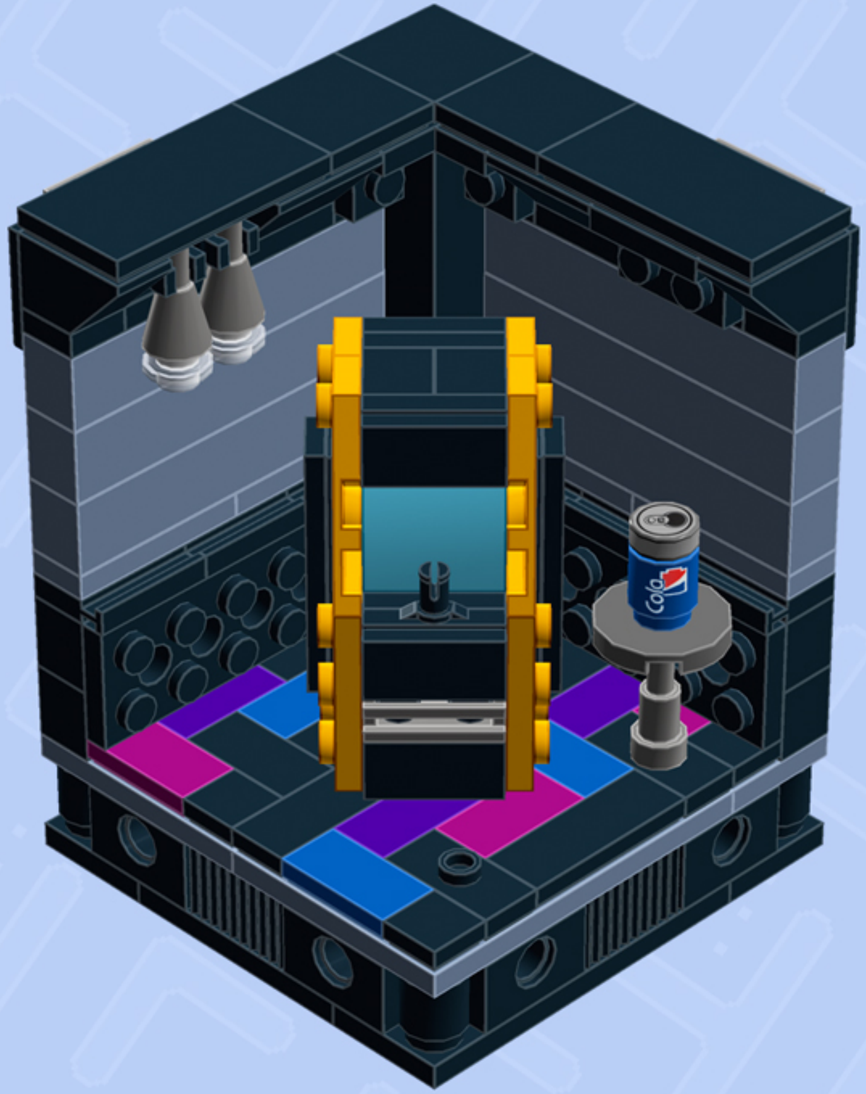

• ARCADE MACHINE •

	Element ID	Color	Description	Quantity
	4616245	Black	Angle Plate 1X2 / 2X4	2
	6000650	Black	Angular Plate 1.5 Bot. 1X2 2/2	4
	300526	Black	Brick 1X1	2
	4558954	Black	Brick 1X1 W. 1 Knob	6
	300426	Black	Brick 1X2	2
	362226	Black	Brick 1X3	2
	4162443	Black	Brick 1X4 W. 4 Knobs	2
	4113241	Black	Brick 2X2X3	2
	4121715	Black	Connector Peg W. Friction	7
	242026	Black	Corner Plate 1X2X2	2
	307026	Black	Flat Tile 1X1	6
	306926	Black	Flat Tile 1X2	5
	4558170	Black	Flat Tile 1X3	4
	243126	Black	Flat Tile 1X4	2
	416226	Black	Flat Tile 1X8	4
	306826	Black	Flat Tile 2X2	3
	4560182	Black	Flat Tile 2X4	2

*Optional custom-printed cola can available from custombricks.net

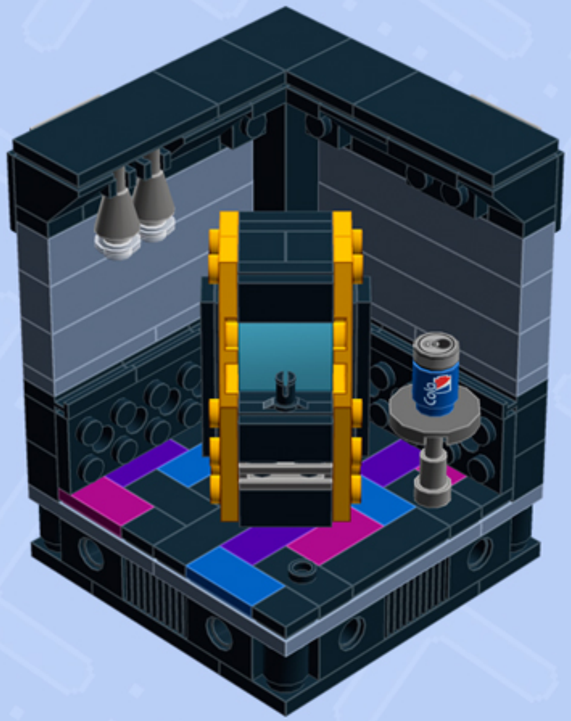

	Element ID	Color	Description	Quantity
	302426	Black	Plate 1X1	6
	4550017	Black	Plate 1X1 W. Holder	2
	302326	Black	Plate 1X2	17
	6092585	Black	Plate 1X2 W. 1 Knob	2
	4107761	Black	Plate 1X2 With Slide	6
	362326	Black	Plate 1X3	2
	371026	Black	Plate 1X4	2
	302226	Black	Plate 2X2	2
	6061032	Black	Plate 2X2 + One Hule Ø4,8	1
	379526	Black	Plate 2X6	2
	3200126	Black	Plate 2X6 W. Holes	2
	303426	Black	Plate 2X8	1
	287726	Black	Profile Brick 1X2	4
	366526	Black	Roof Tile 1X2 Inv.	2
	366026	Black	Roof Tile 2X2/45° Inv.	2
	306226	Black	Round Brick 1X1	4
	6073231	Black	Single Bush 2M Ø4,9	1

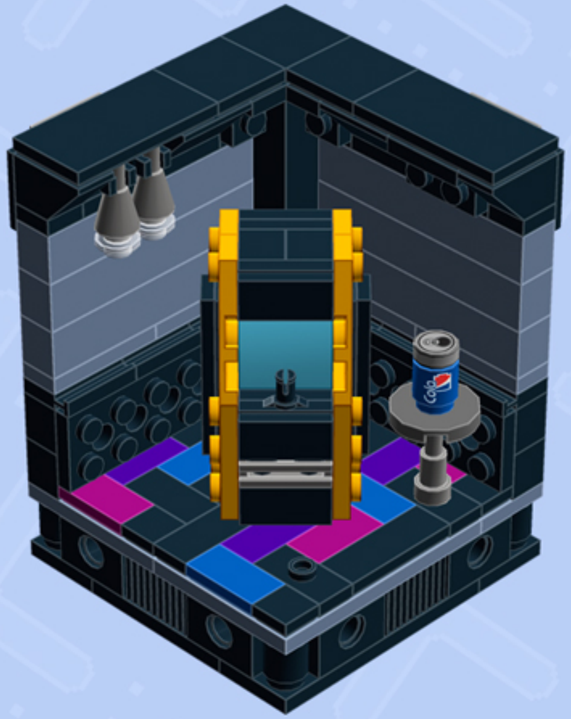

	Element ID	Color	Description	Quantity
	370026	Black	Technic Brick 1X2	6
	281726	Black	Technic Doub. Bearing Pl. 2X2	1
	6122656	Black	Wheel Bearing 1X2X1/3 W/Mini Snap	1
	4206330	Bright Blue	Flat Tile 1X1	1
	306923	Bright Blue	Flat Tile 1X2	3
	6099364	Bright Reddish Violet	Flat Tile 1X1	1
	4611415	Bright Reddish Violet	Flat Tile 1X2	3
	6100030	Dark Stone Grey	Beam 1X1	2
	6066119	Dark Stone Grey	Brick 1X4X1 2/3 W. V. Knobs	2
	6115080	Dark Stone Grey	Plate Round W. 1 Knob	1
	6020145	Flame Yellowish Orange	Left Plate 2X3 W/Angle	1
	6020074	Flame Yellowish Orange	Plate 1X6	2
	6097503	Flame Yellowish Orange	Plate 2X3	3
	6020146	Flame Yellowish Orange	Right Plate 2X3 W/Angle	1
	6119126	Medium Azure	Plate W. Bow 2X2X2/3	1
	4613192	Medium Lilac	Flat Tile 1X2	4
	4520320	Medium Stone Grey	3 M.Arch W.Knob And Shaft Ø3.2	1

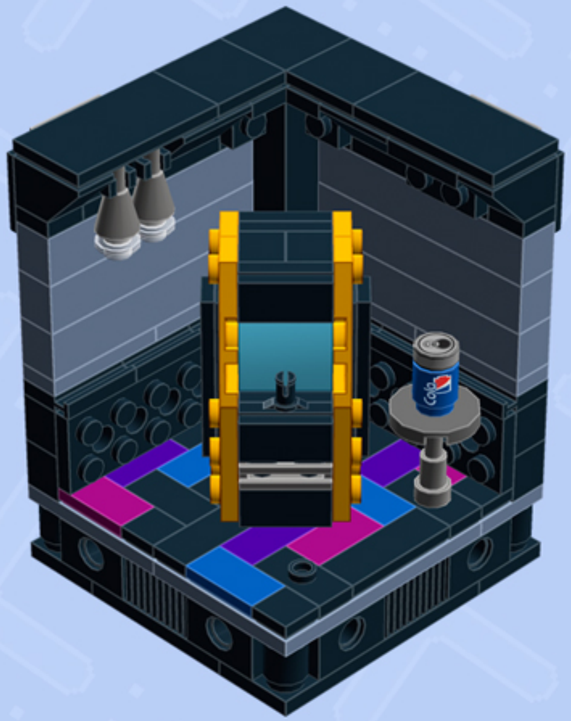

	Element ID	Color	Description	Quantity
	4211807	Medium Stone Grey	Connector Peg	1
	4211483	Medium Stone Grey	Connector Peg W. Knob	3
	4211398	Medium Stone Grey	Plate 1X2	3
	6089147	Medium Stone Grey	Plate 1X2 W. Horizontal Hole Ø4,85	2
	4211503	Medium Stone Grey	TAP Ø4.9/6.4	2
	4211651	Medium Stone Grey	Technic 5M Beam	2
	4620992	Sand Blue	Brick 1x6	8
	6139341	Sand Blue	Flat Tile2X3 W/Angle	1
	6142245	Sand Blue	Plate 1X3	4
	6052827	Sand Blue	Plate 2X4	2
	6062086	Sand Blue	Plate 4X6	2
	6121354	Silver Metallic	Cone 1X1 Inverted W. Shaft	2
	4619636	Silver Metallic	Radiator Grille 1X2	5
	4618184	Silver Metallic	Stick Ø3.2 2Mm W/Knob And Tube	1
	3005740	Transparent	Plate 1X1 Round	2
	614101	White	Plate 1X1 Round	4
	302301	White	Plate 1X2	1

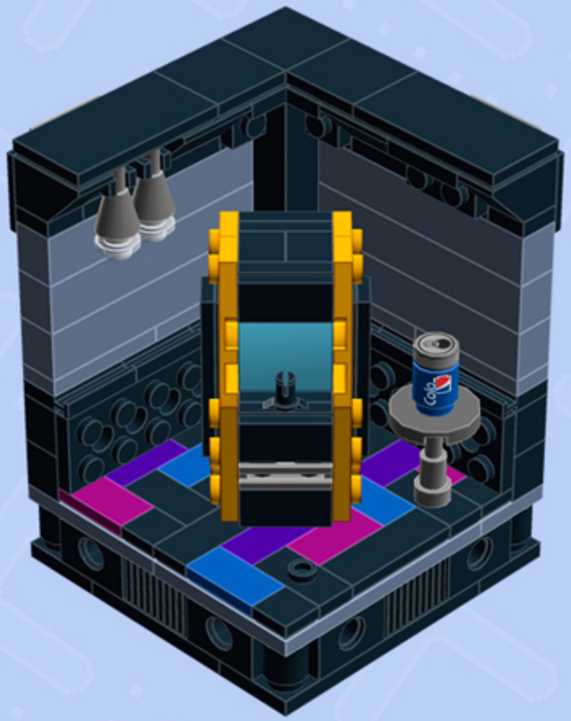

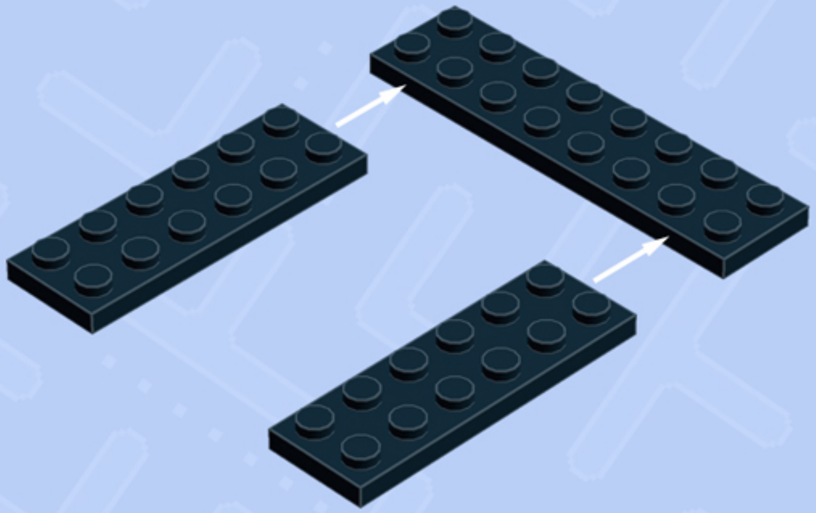

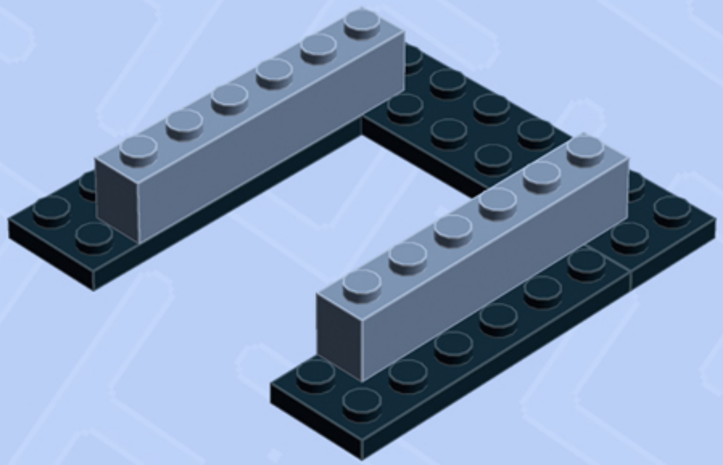

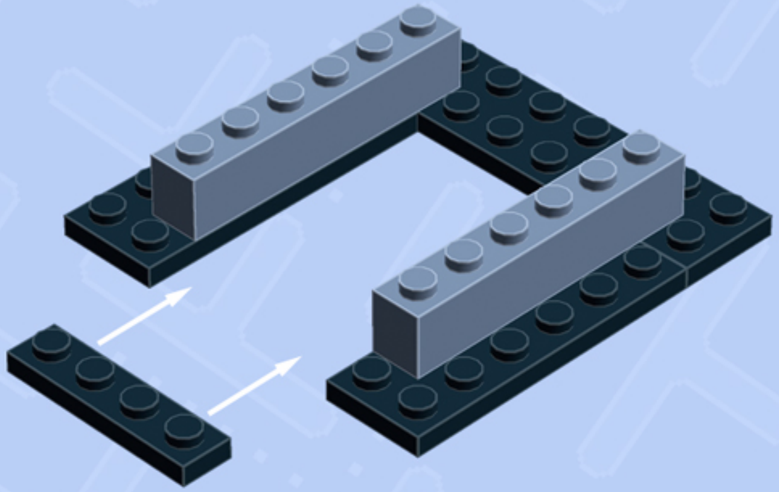

6x

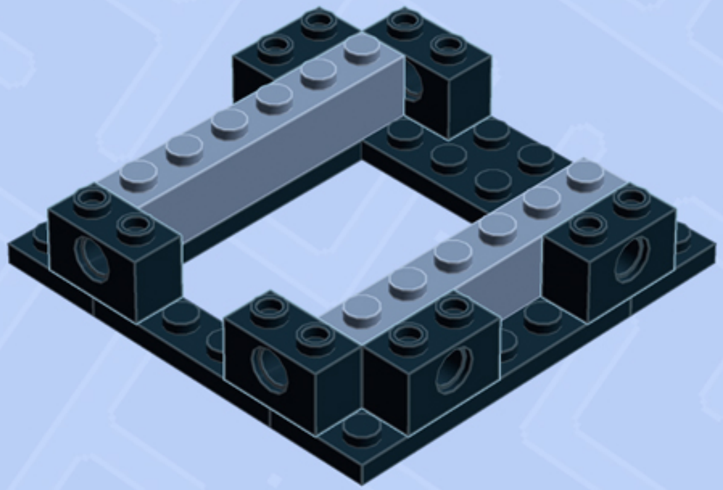

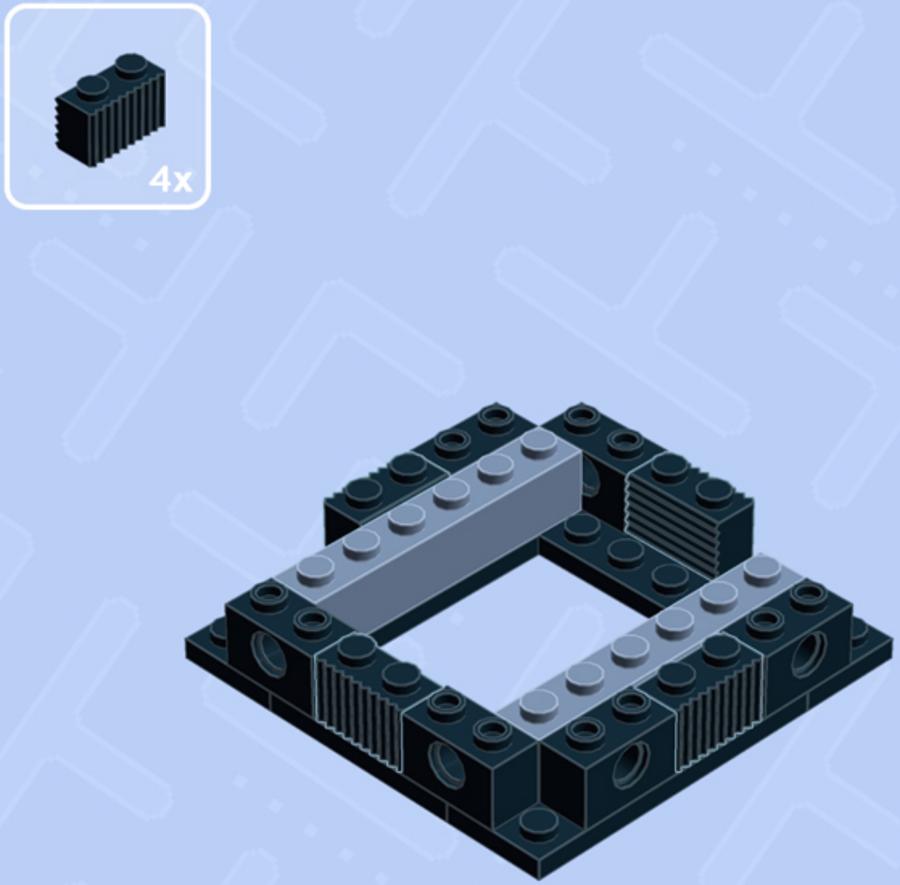
4x

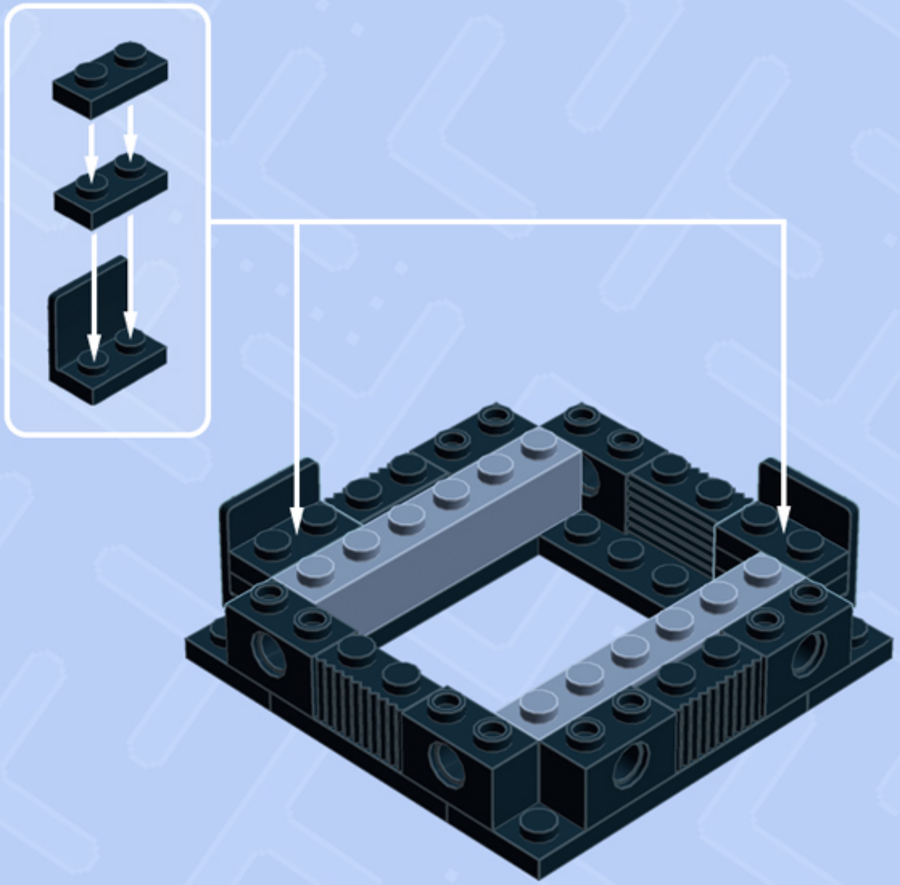

4x

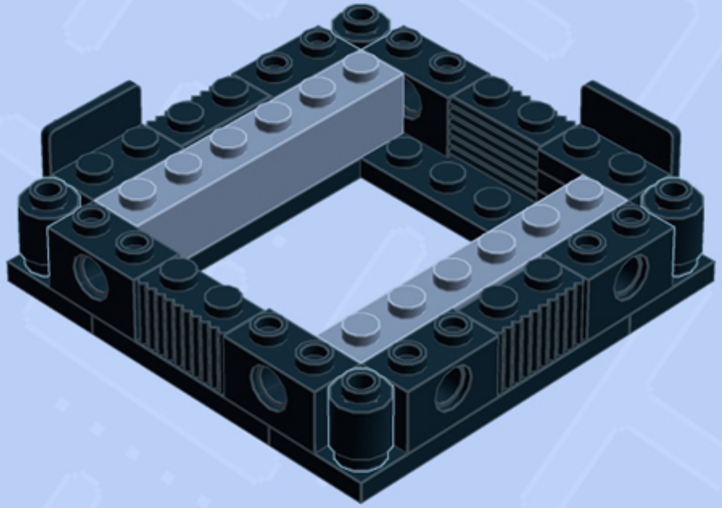

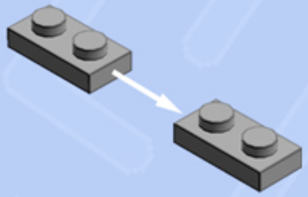

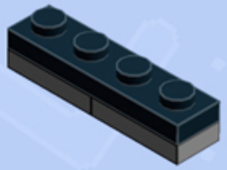

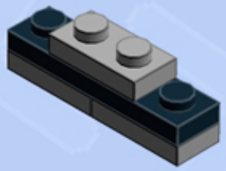

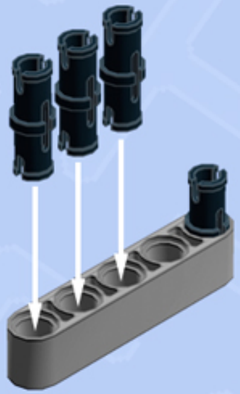

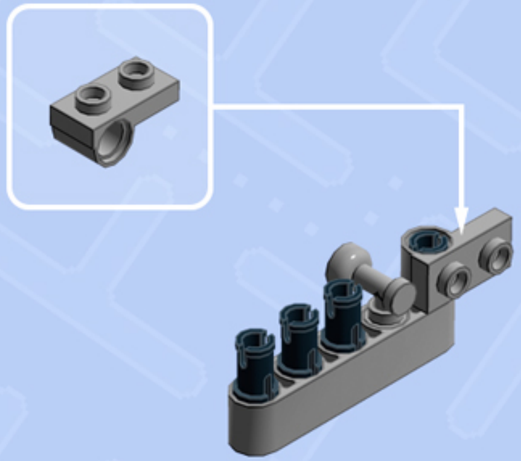

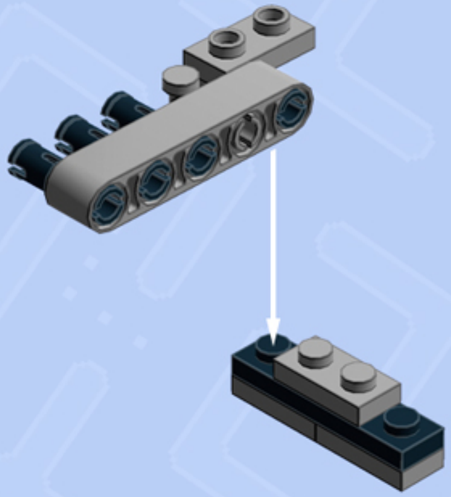

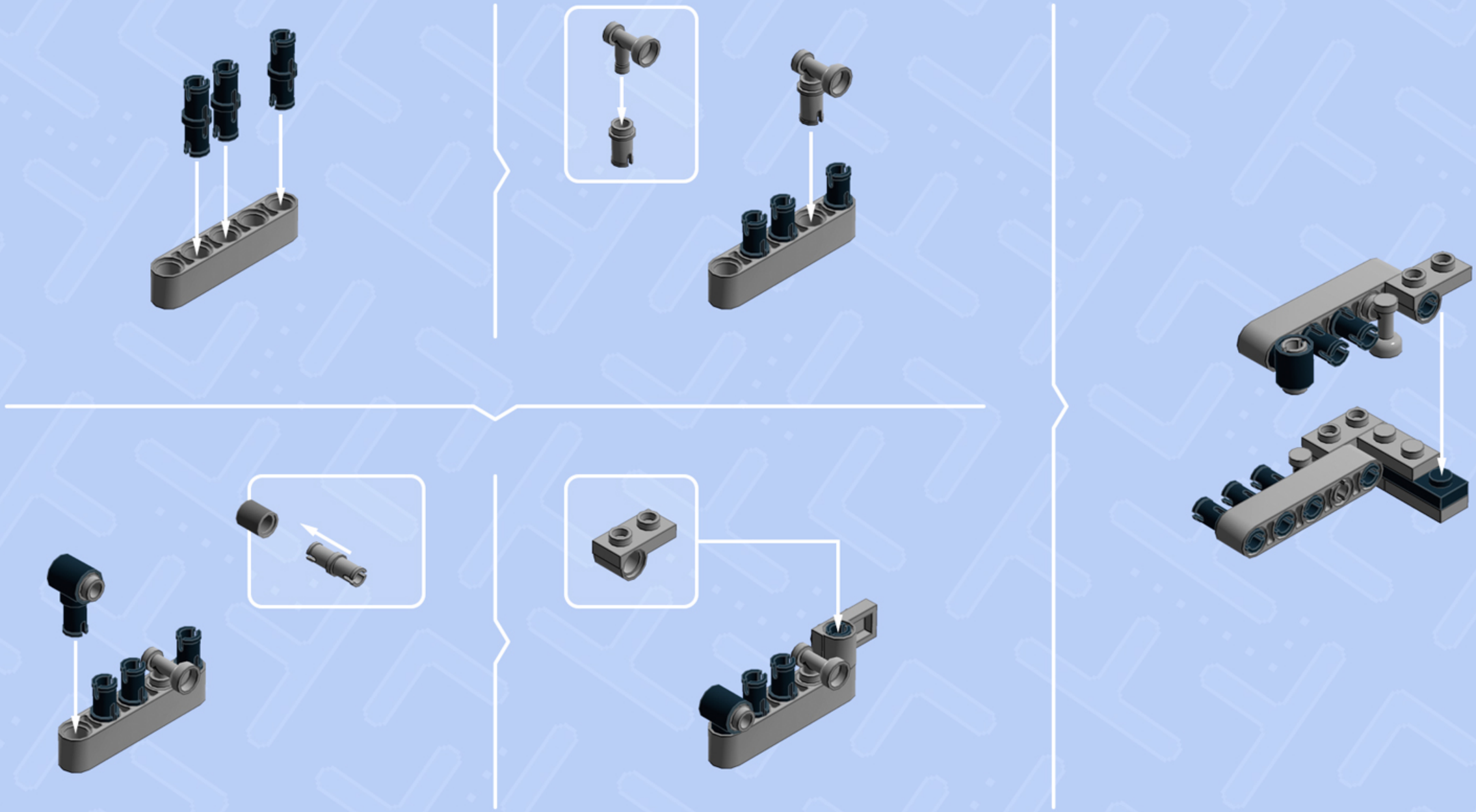

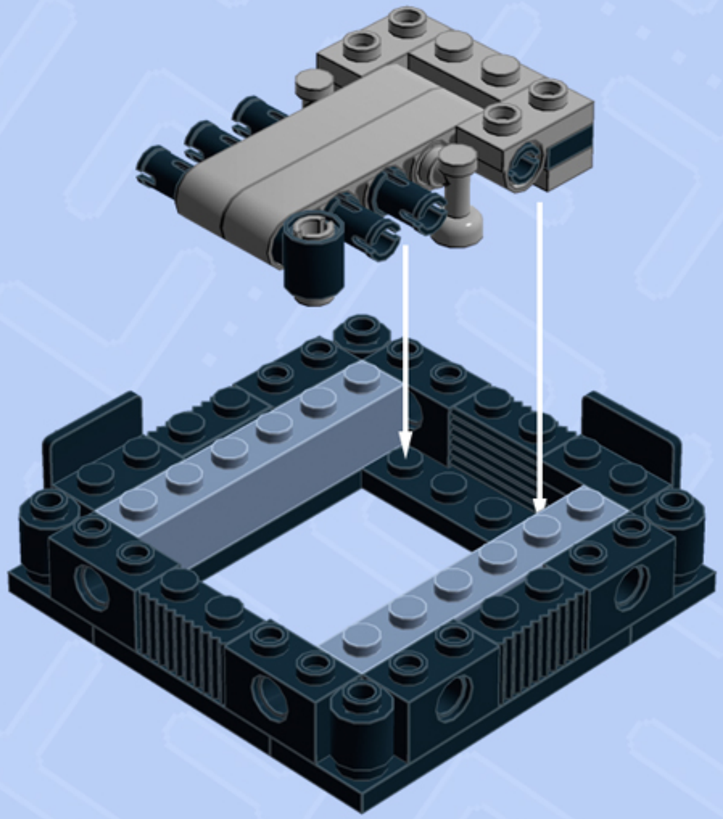

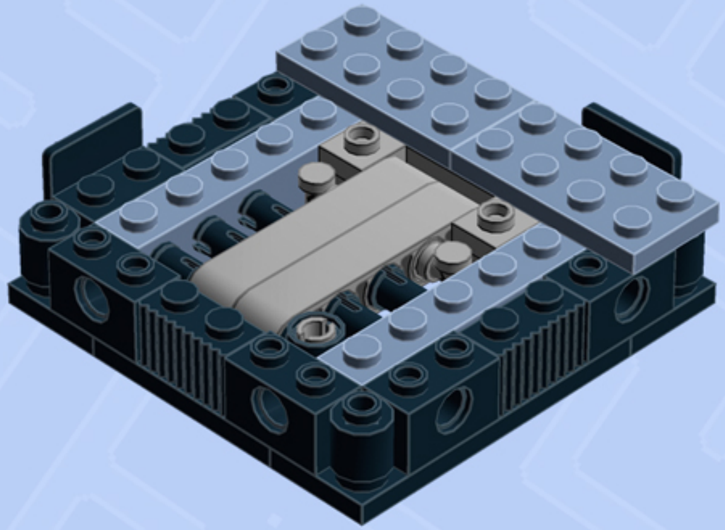

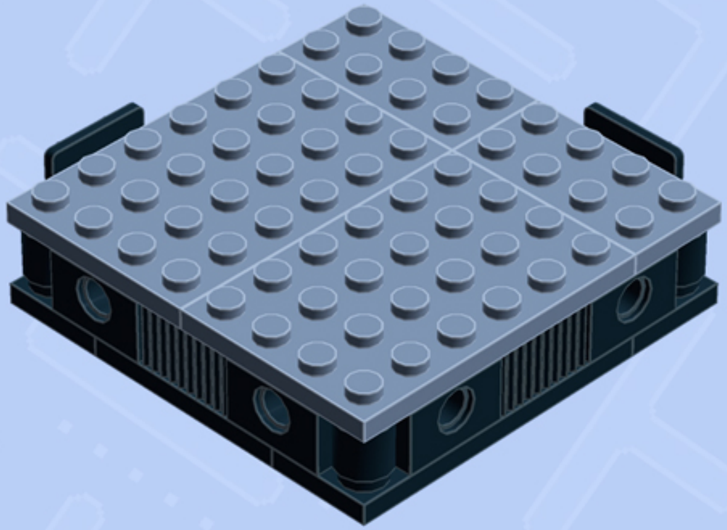

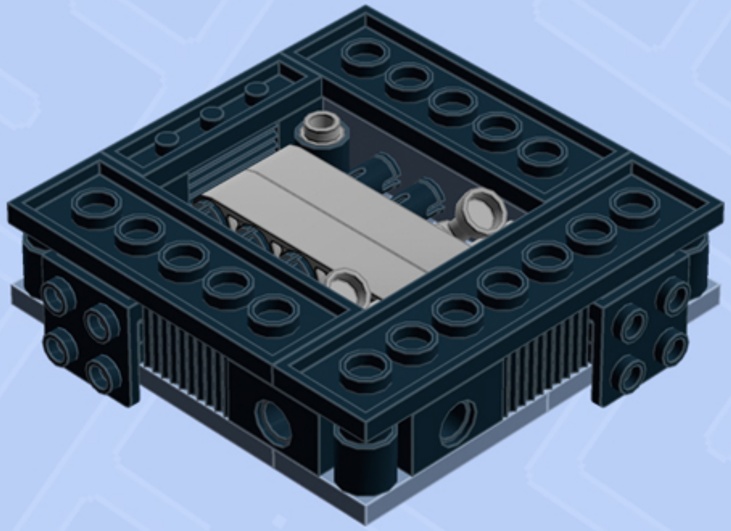

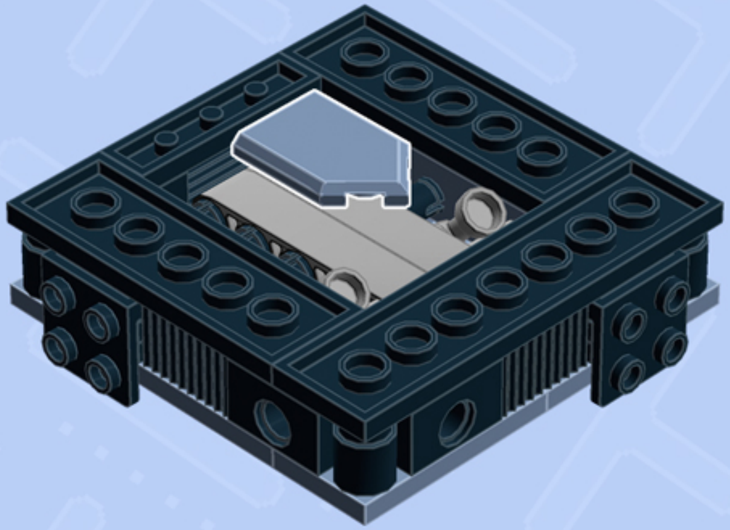

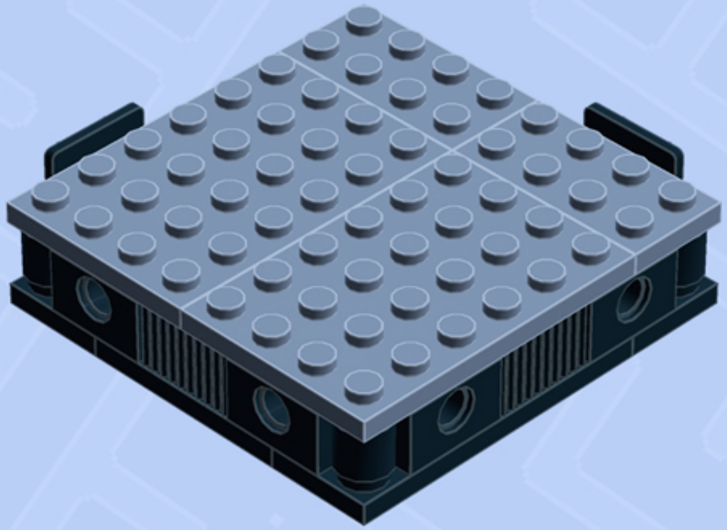

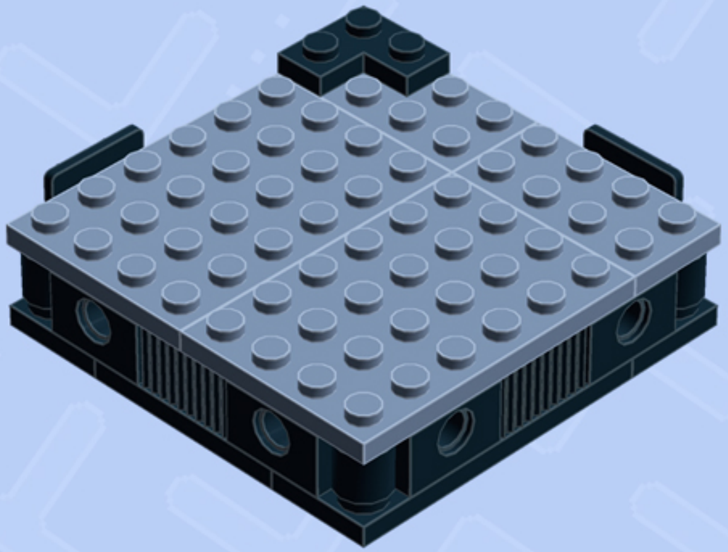

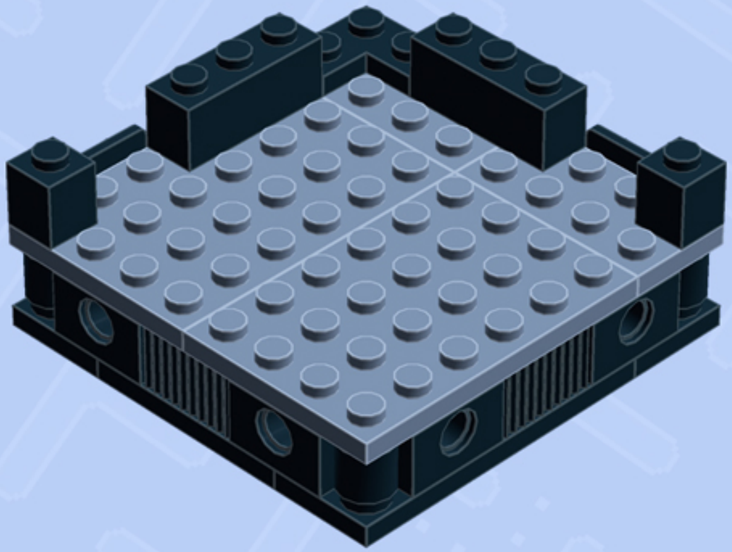

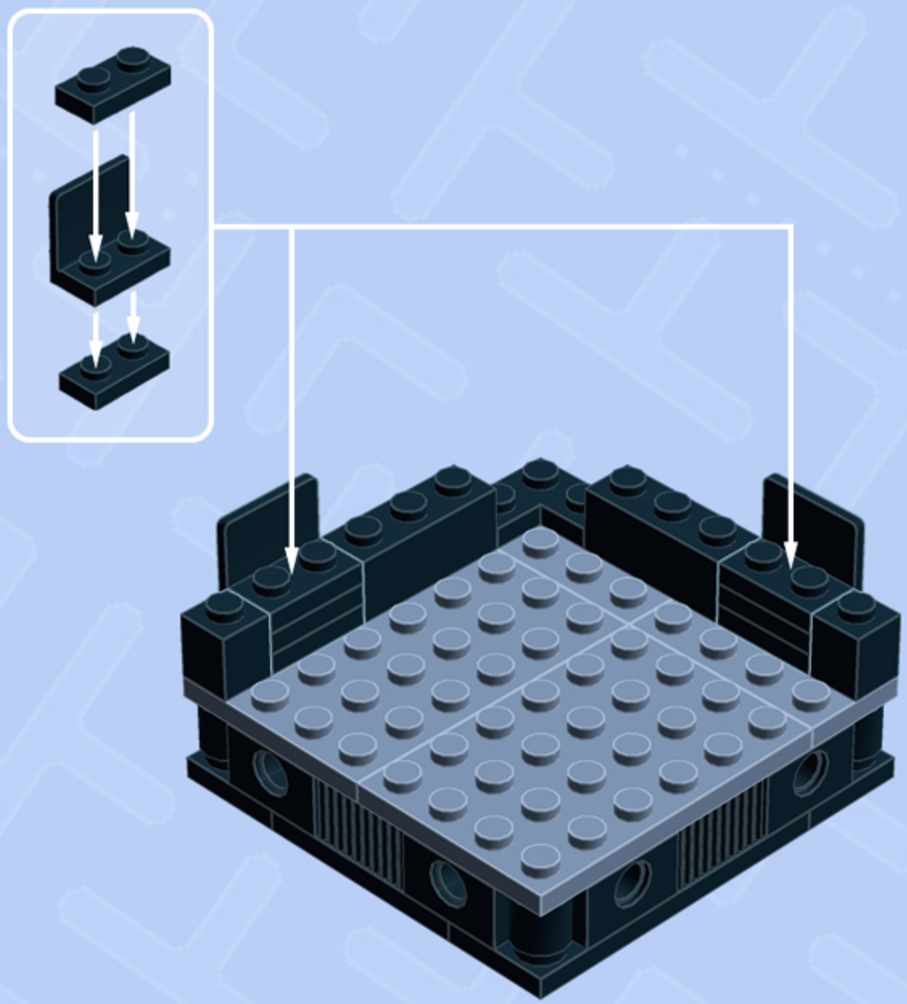

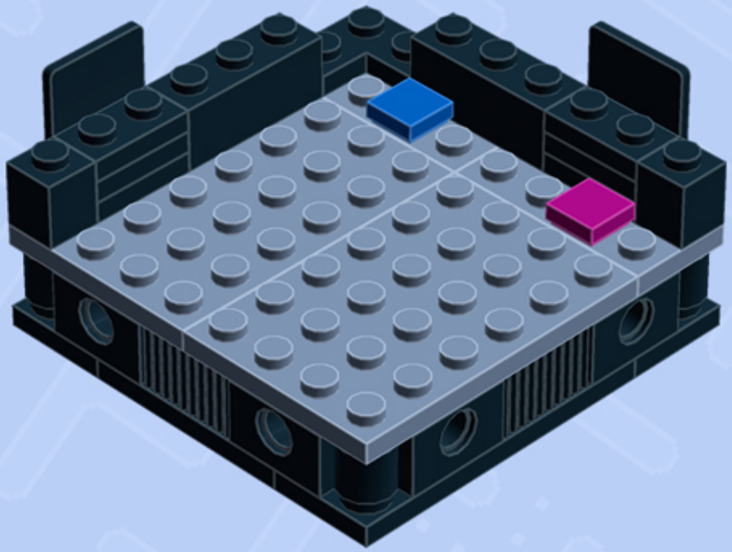

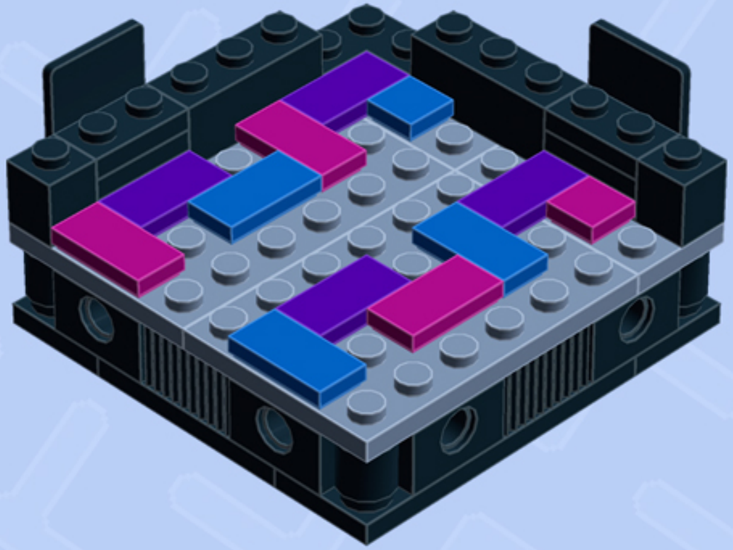

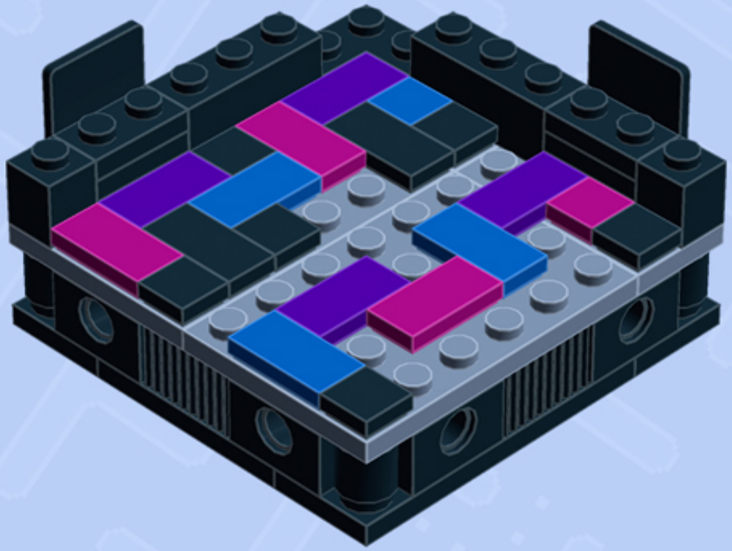

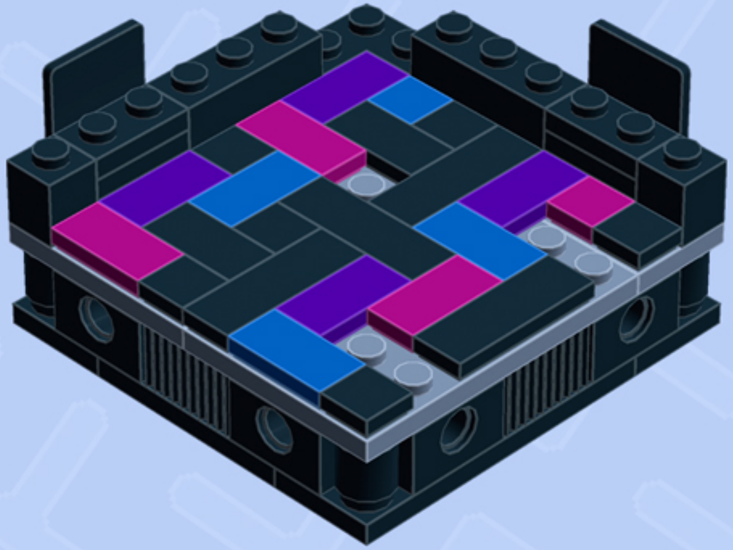

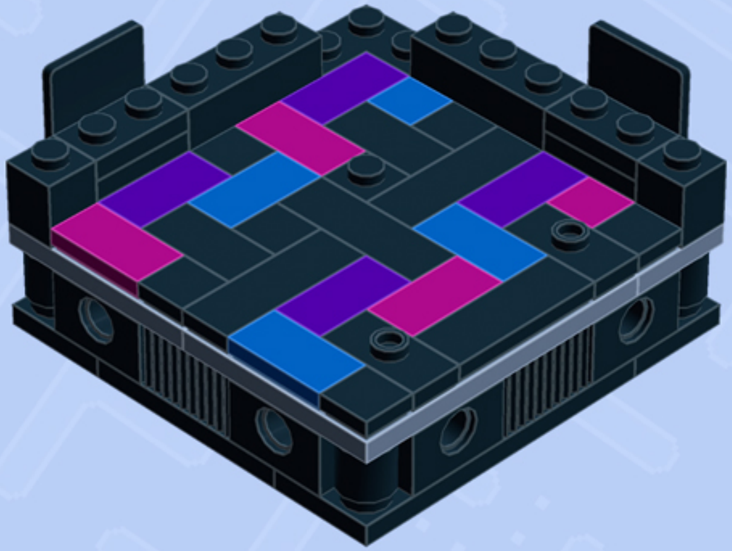

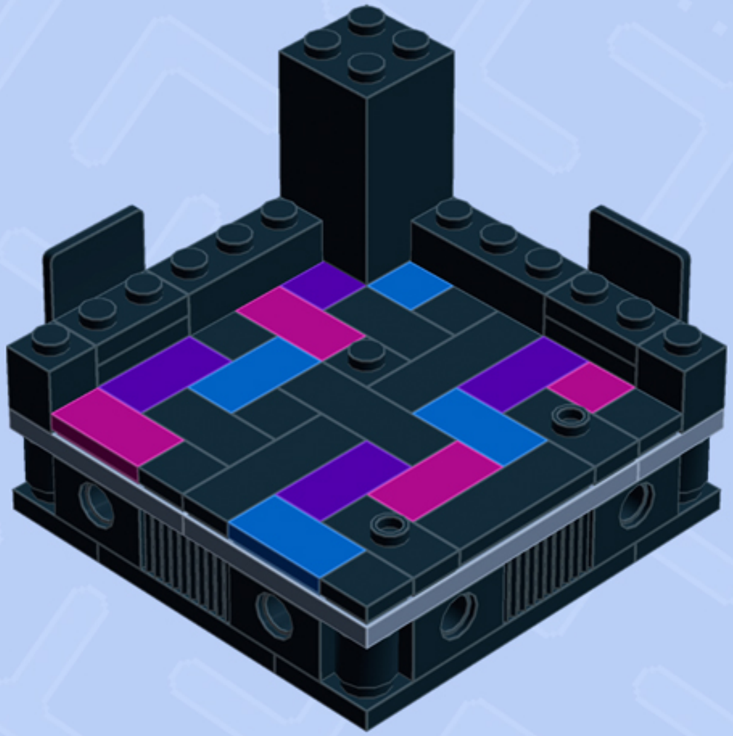

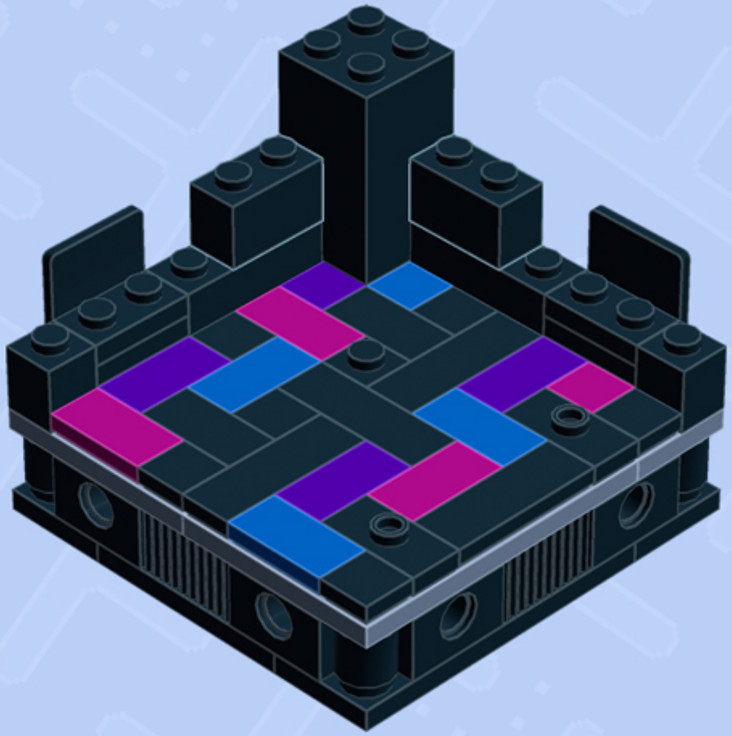

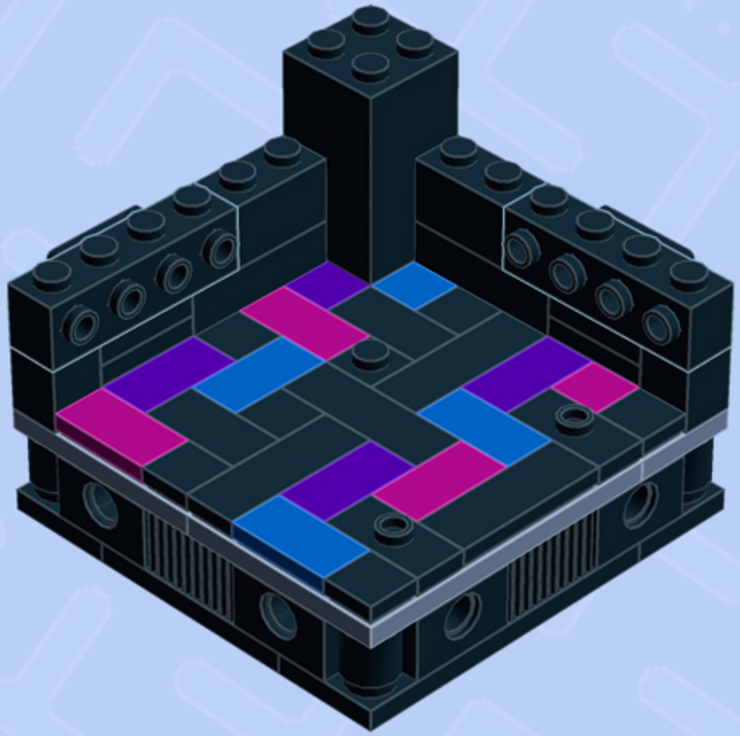

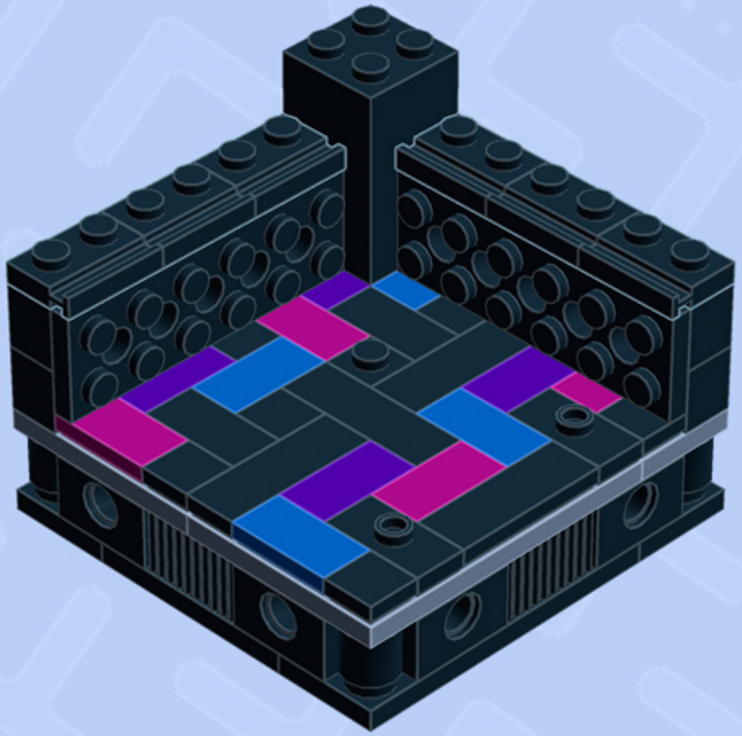

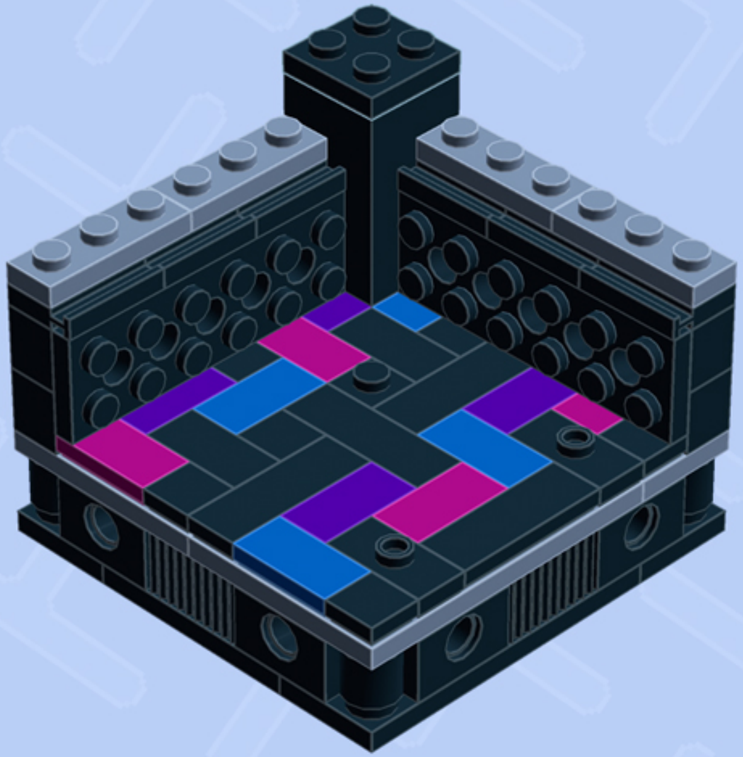

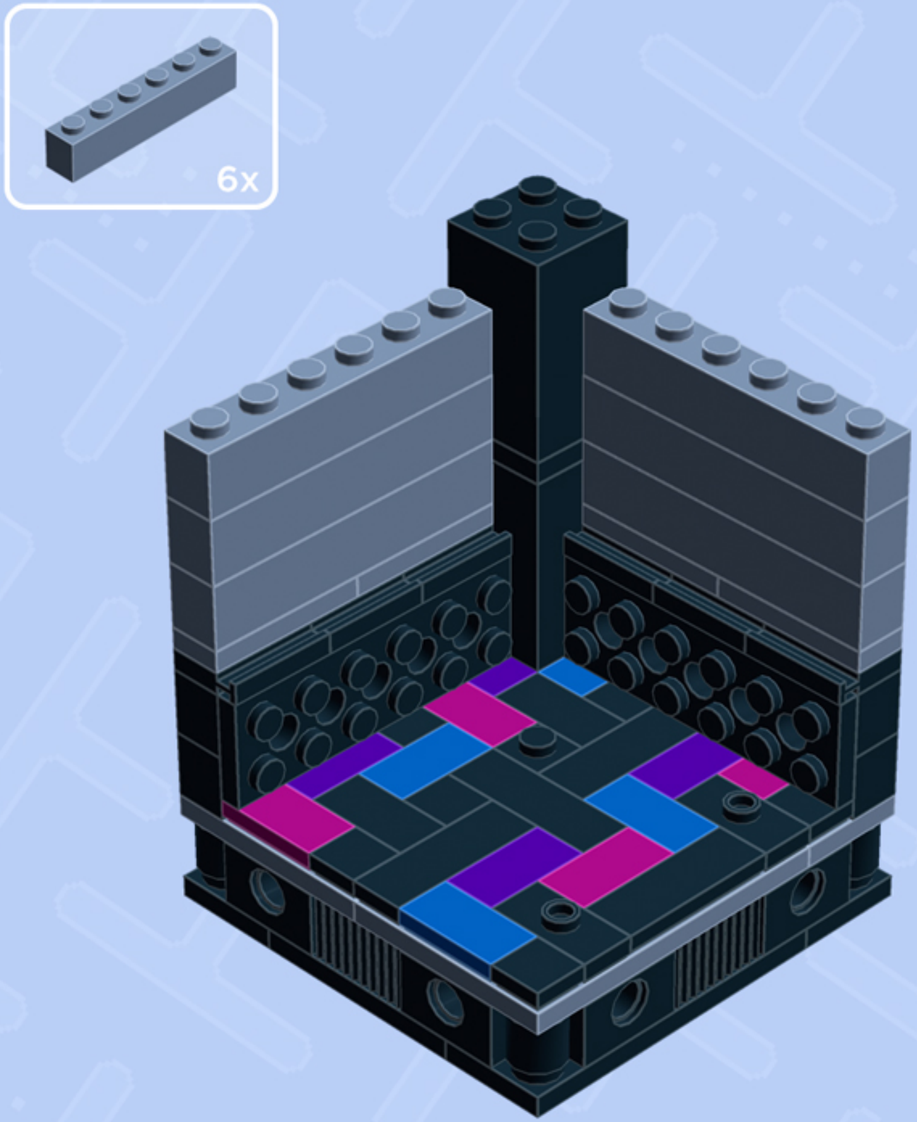
6x

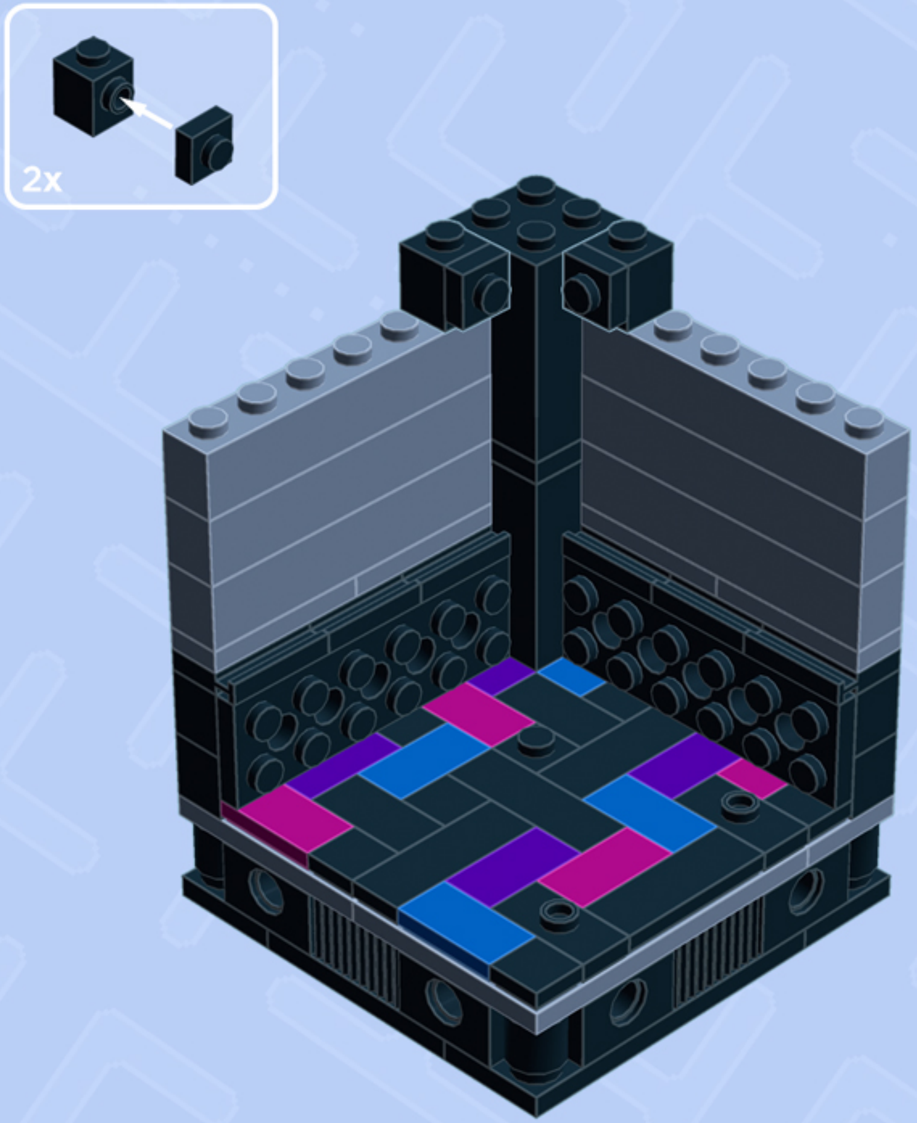
2x

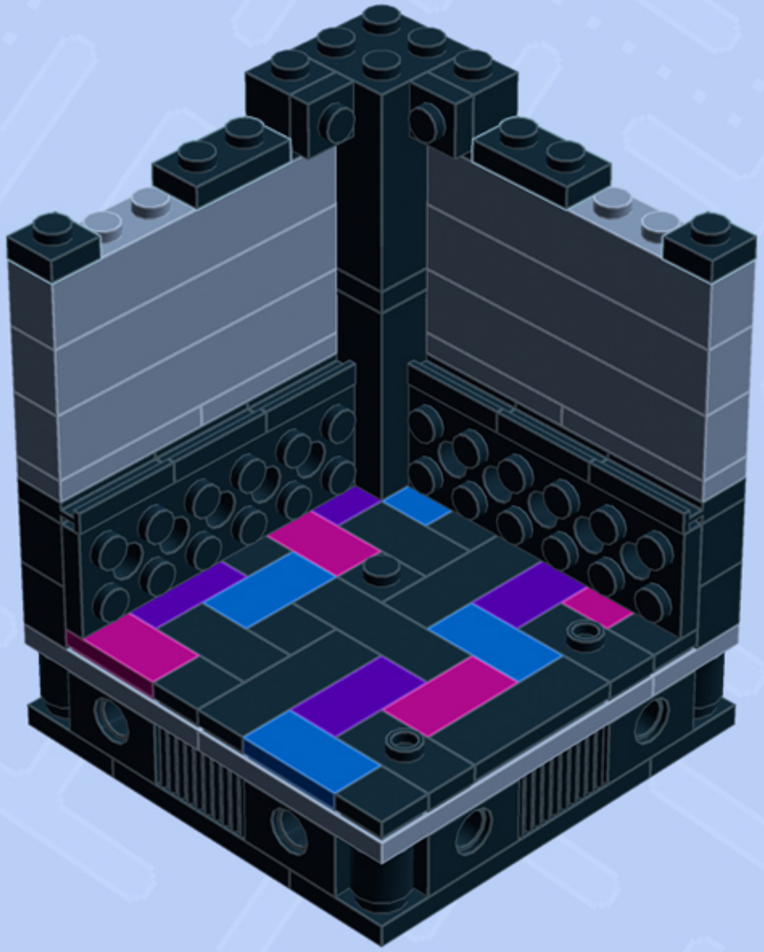

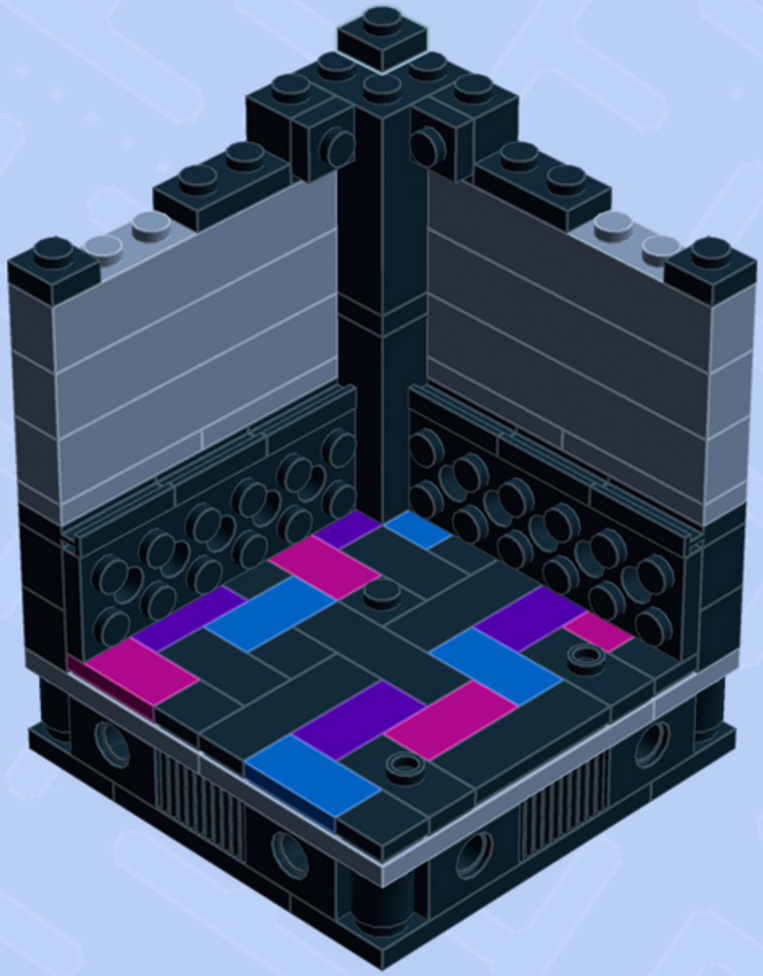

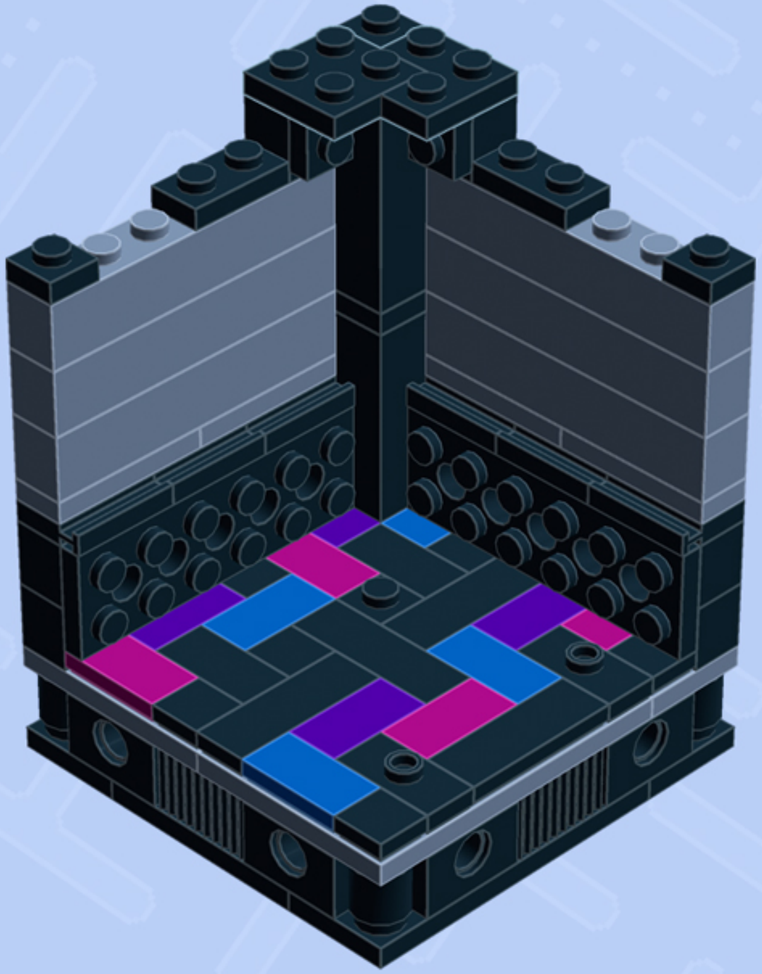

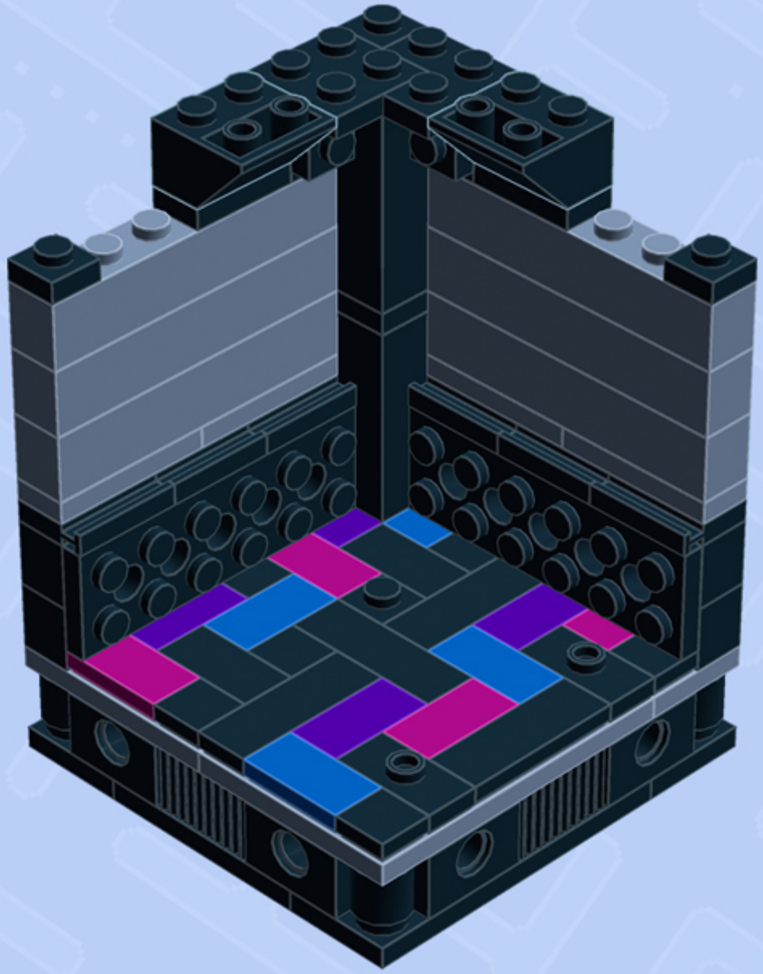

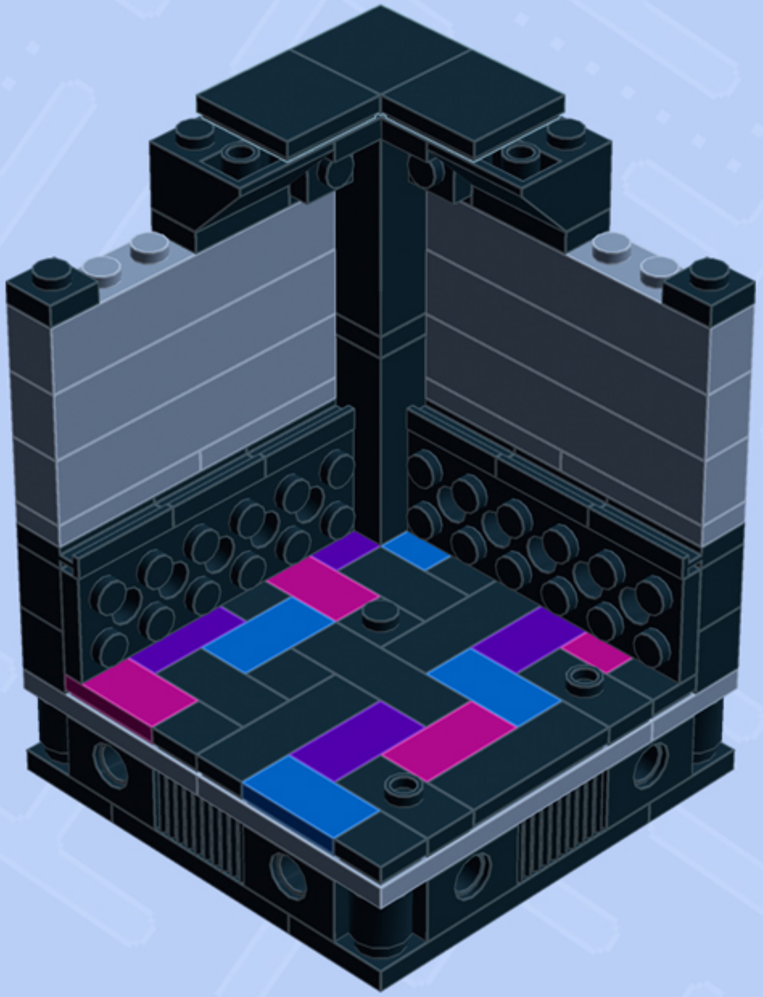

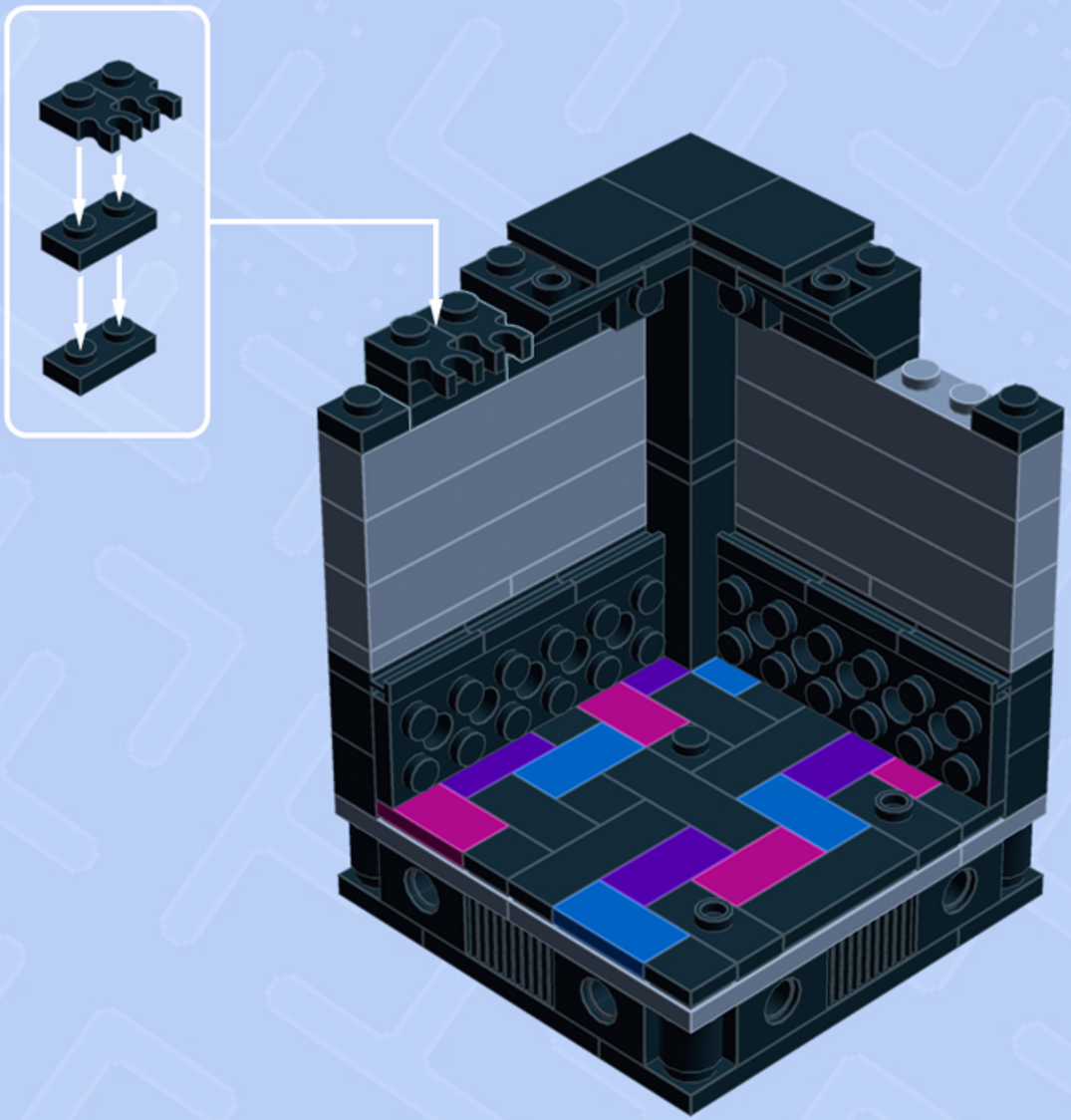

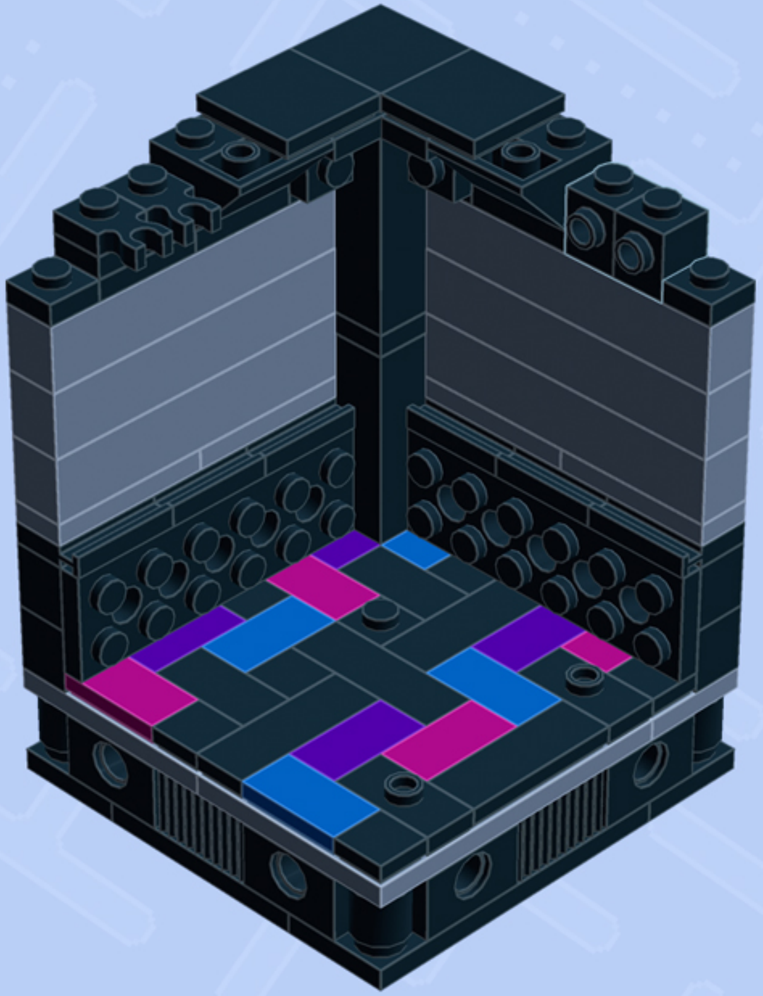

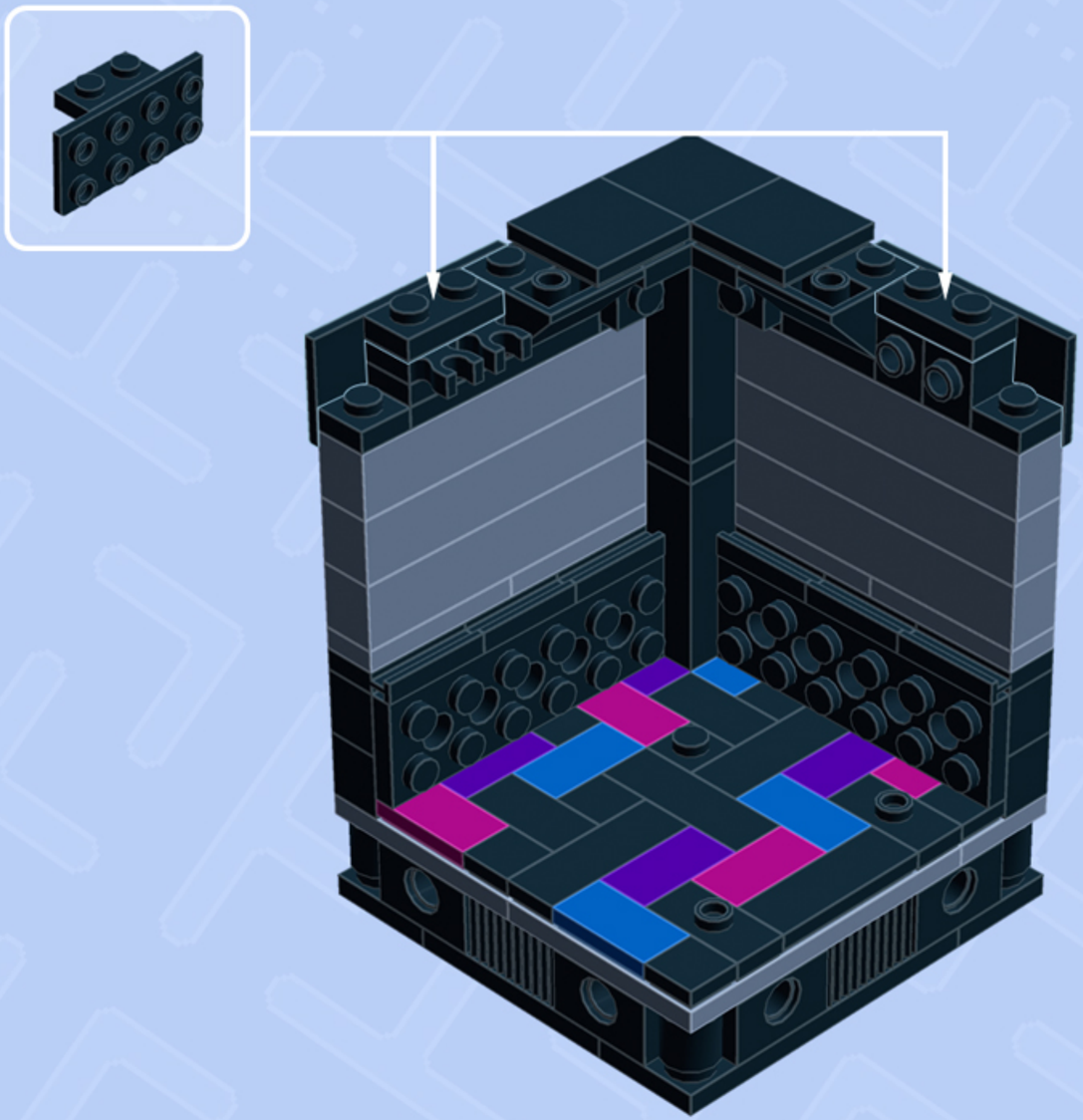

2x

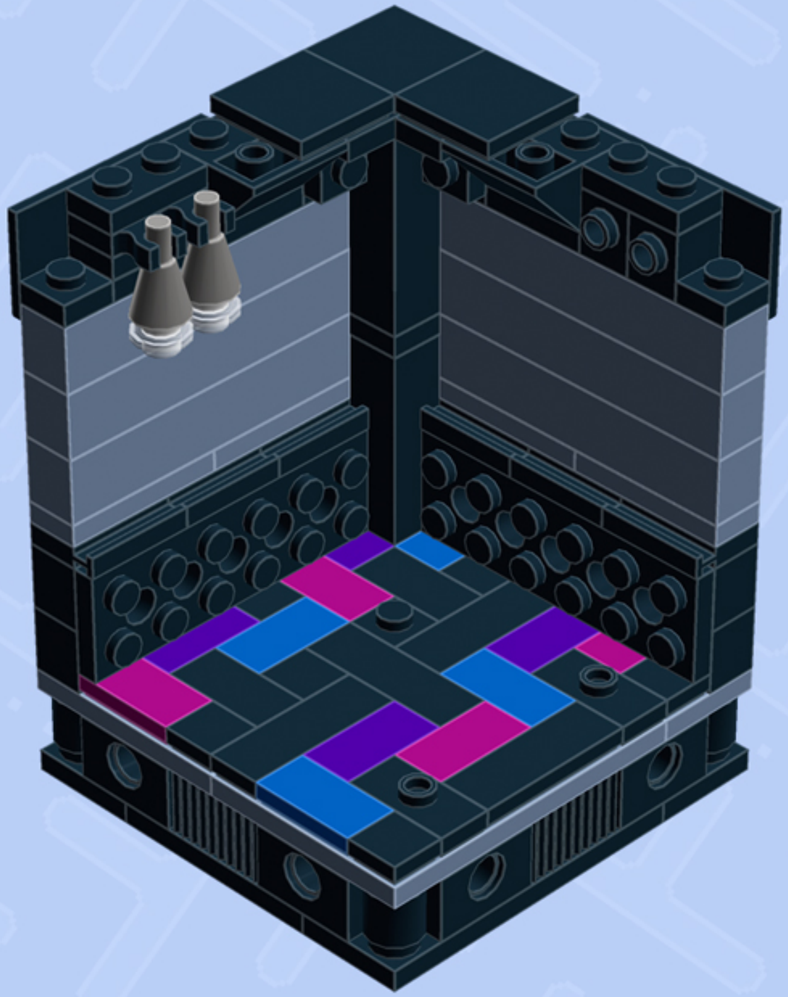

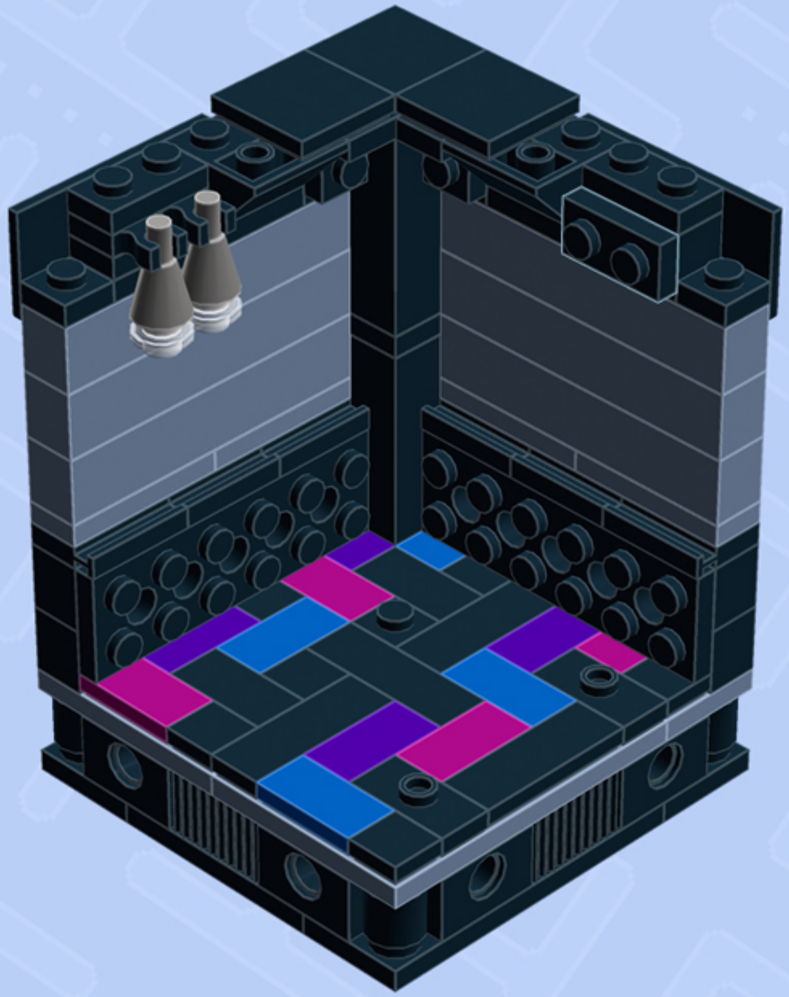

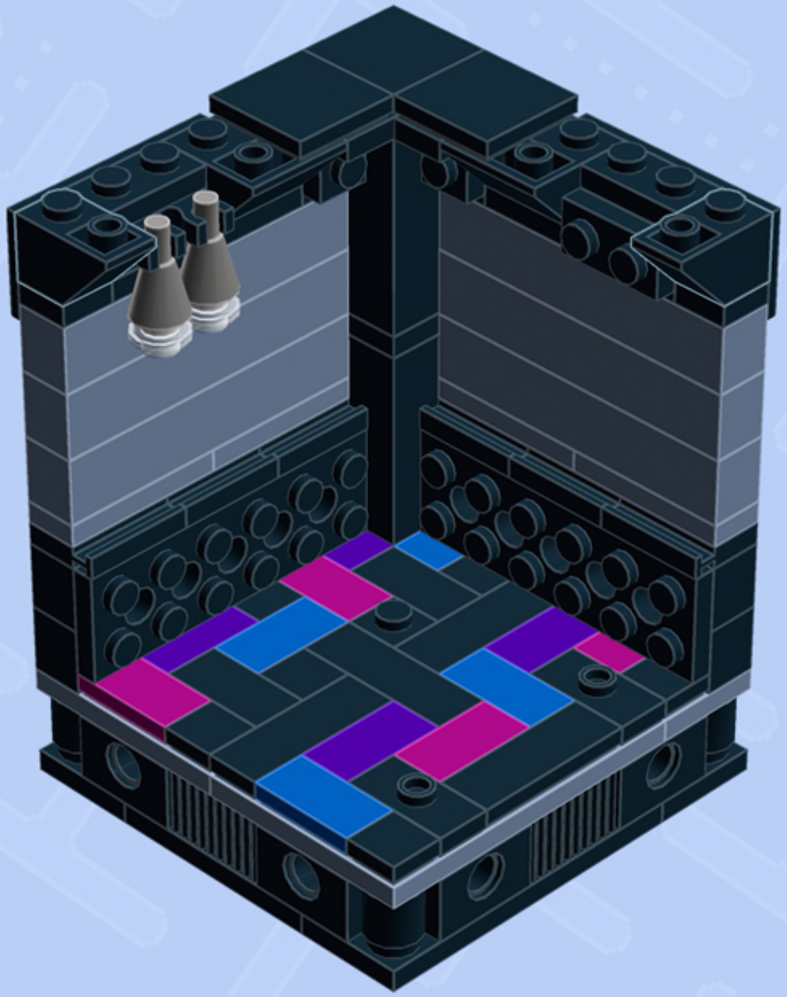

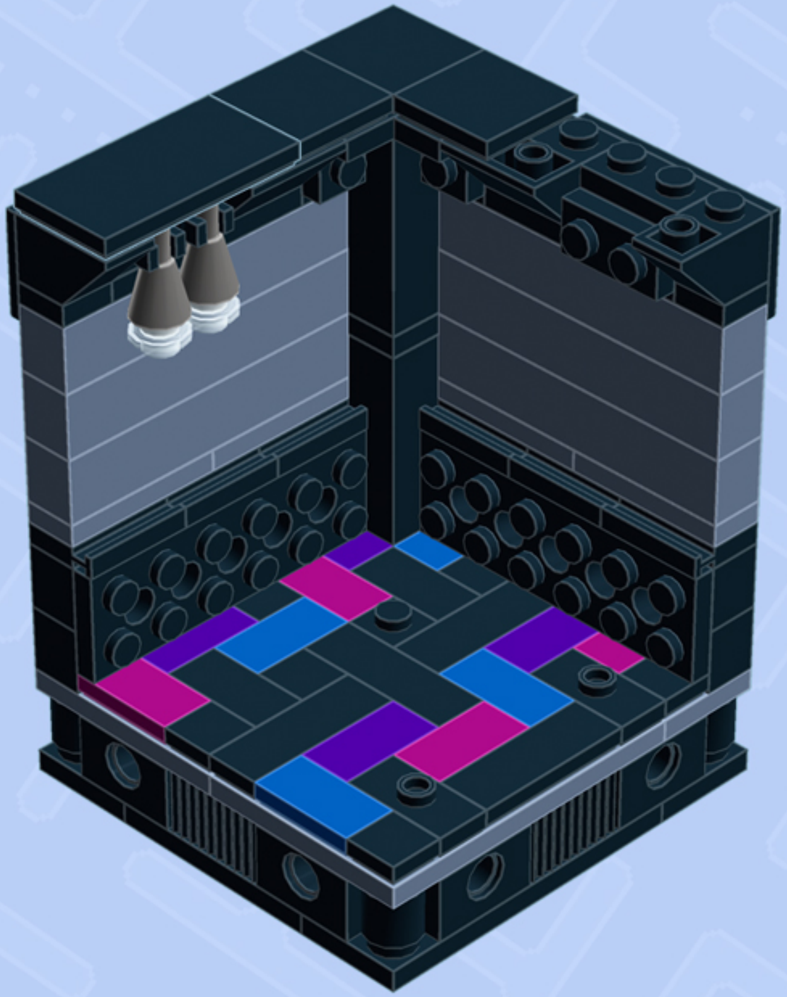

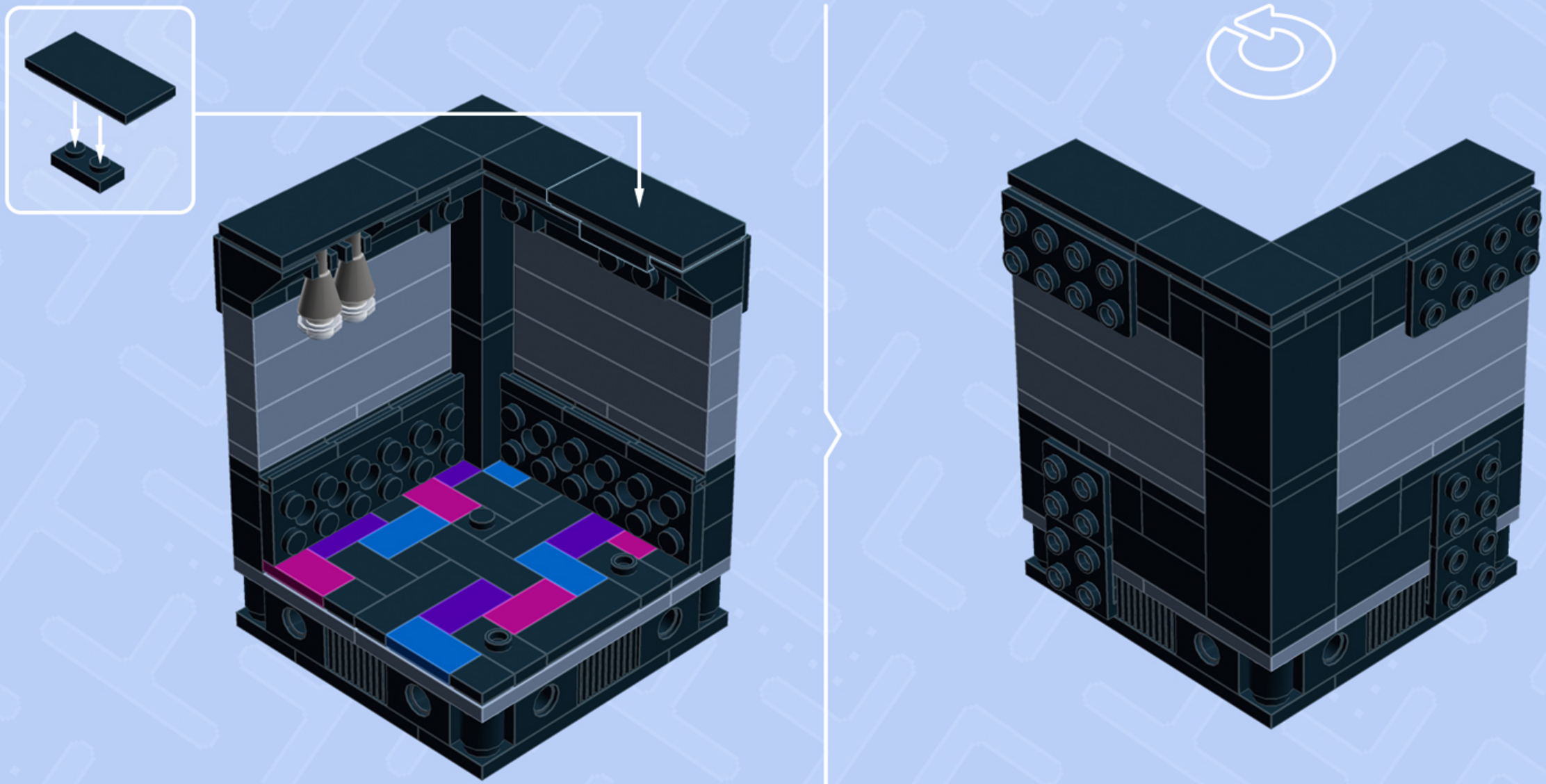

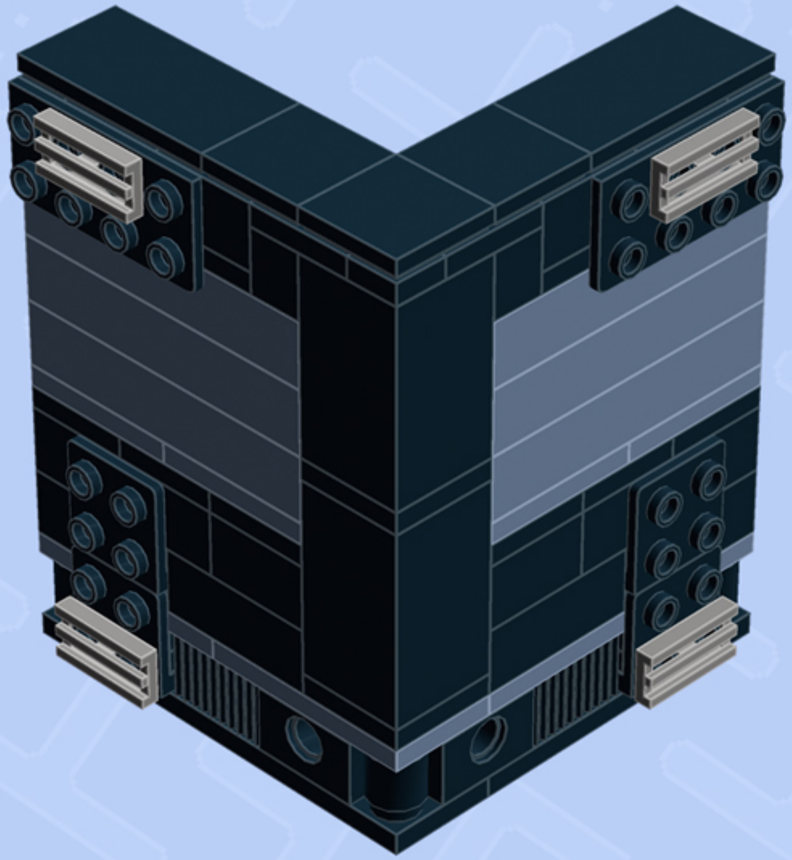

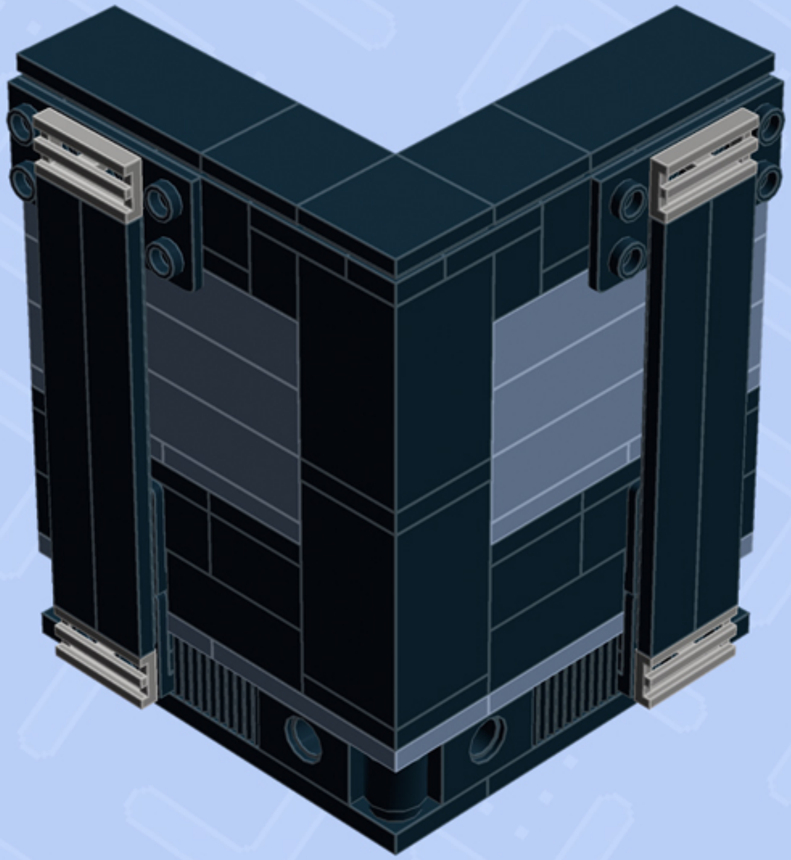

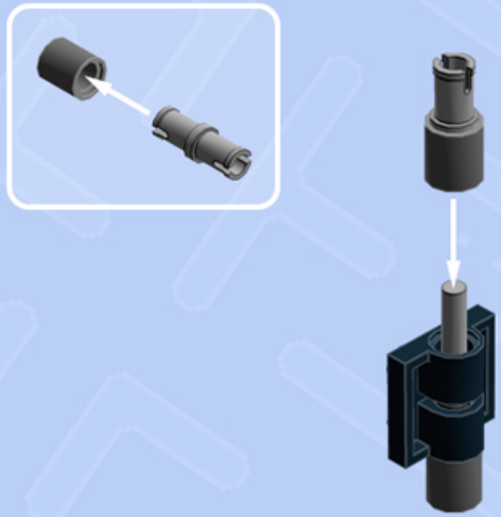

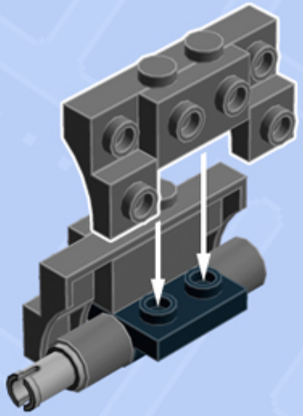

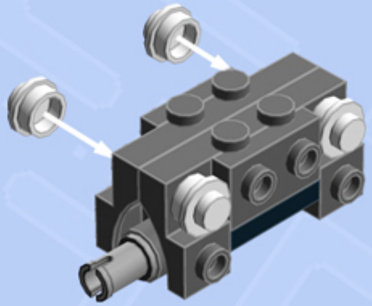

2x

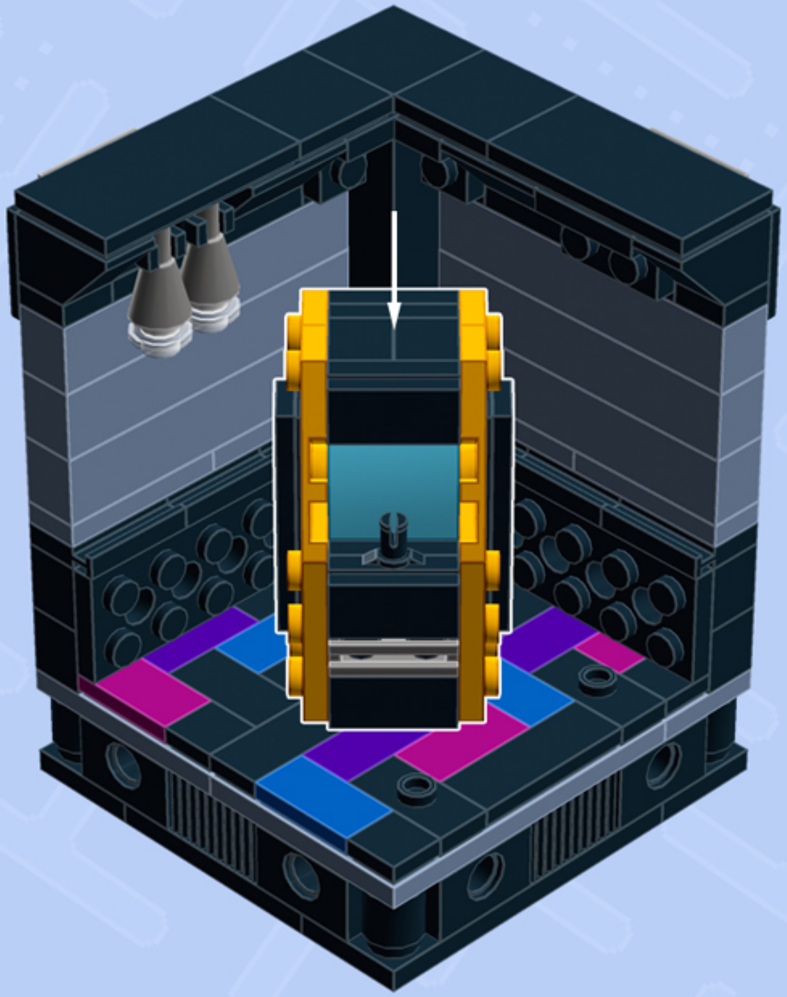

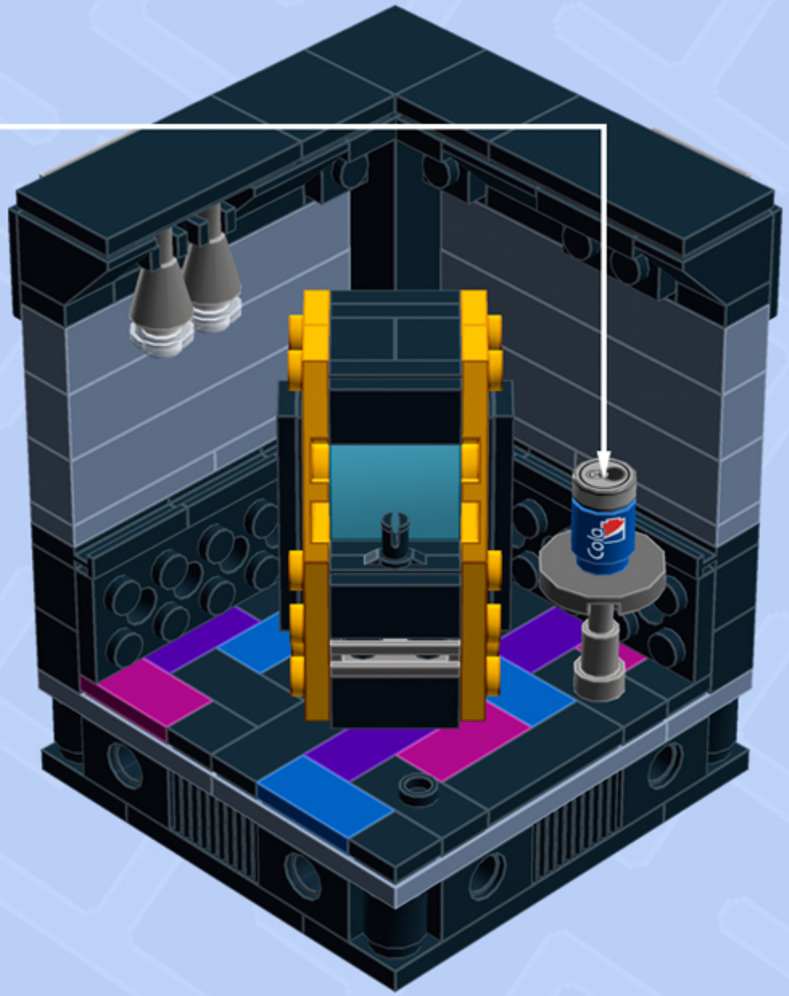

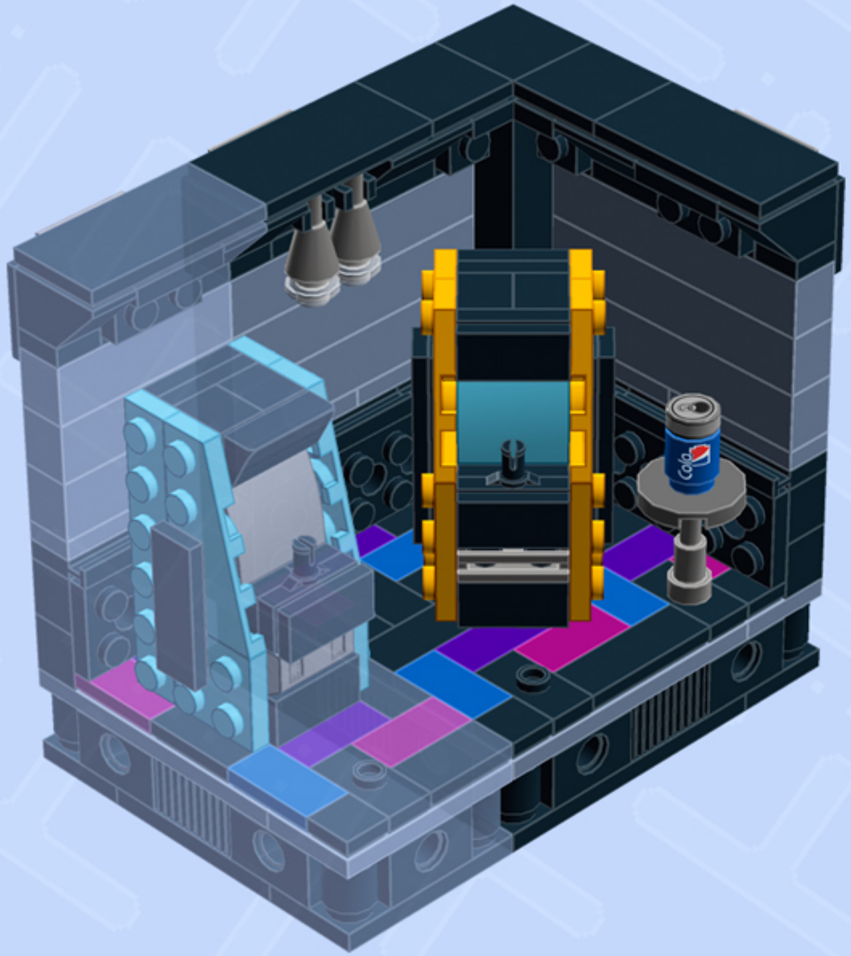

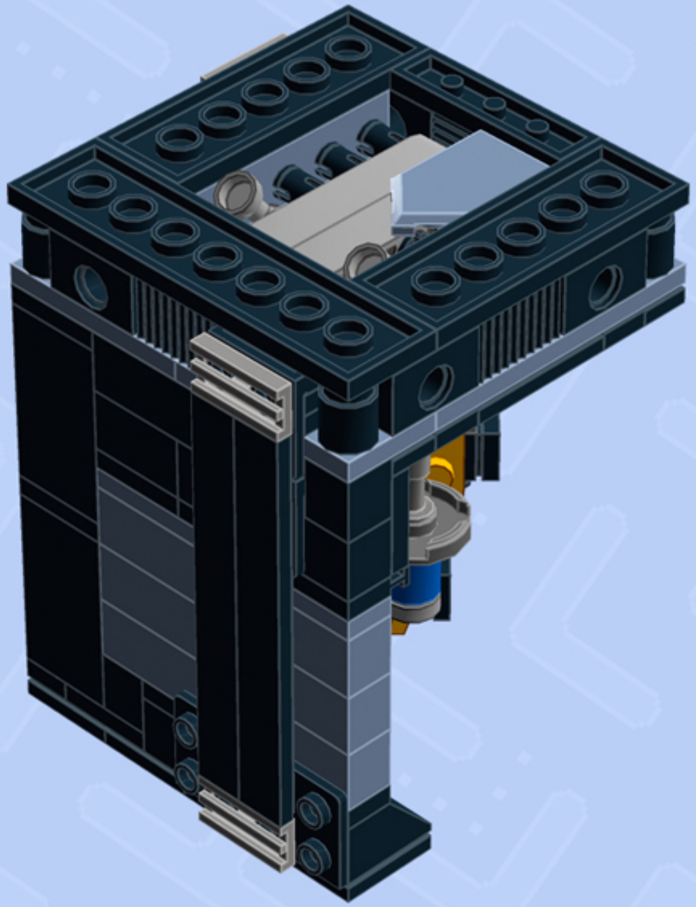

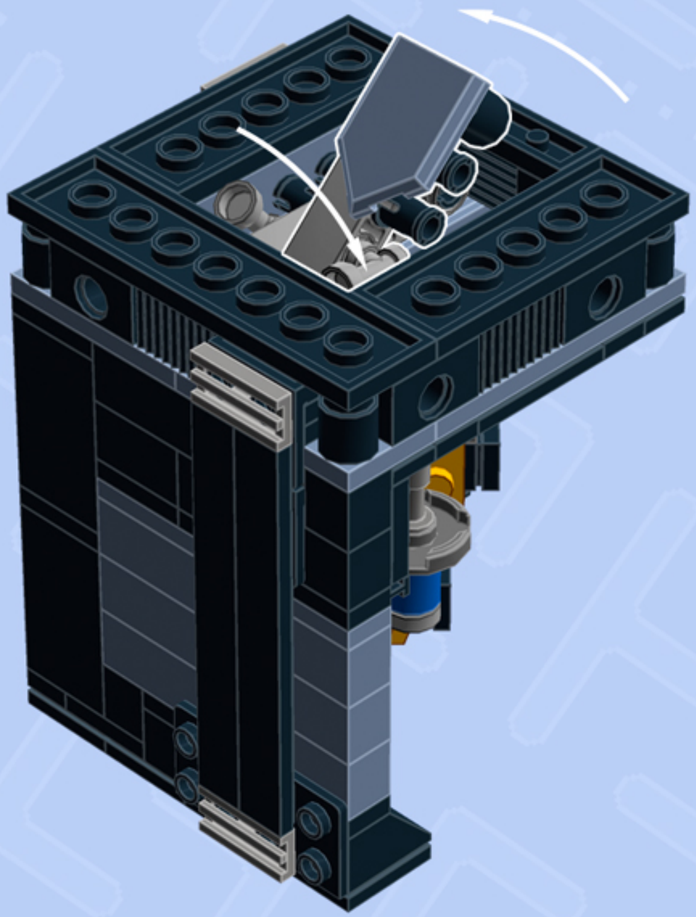

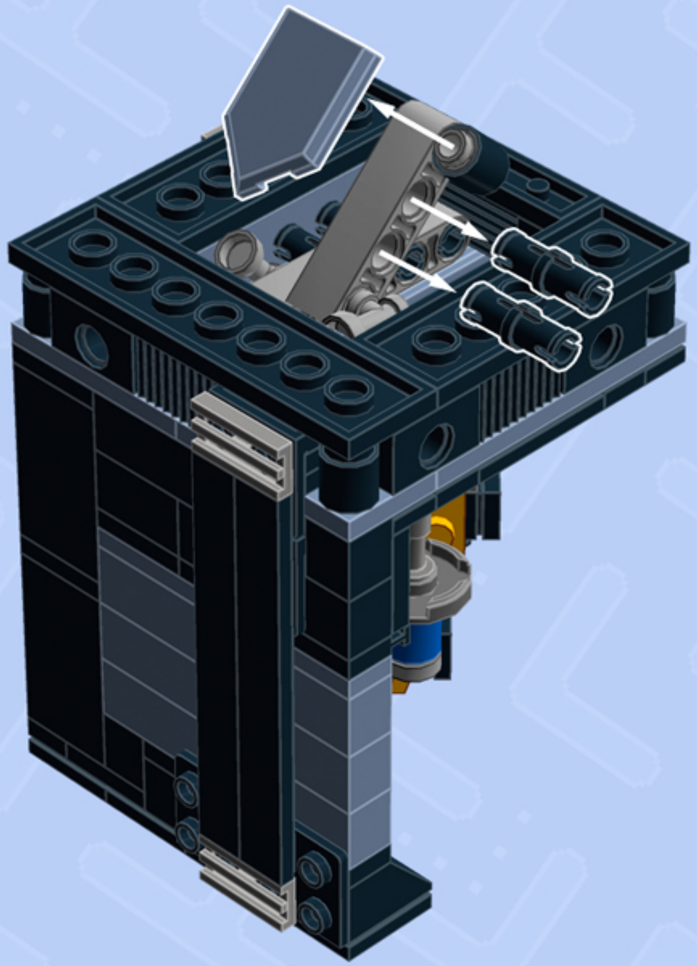

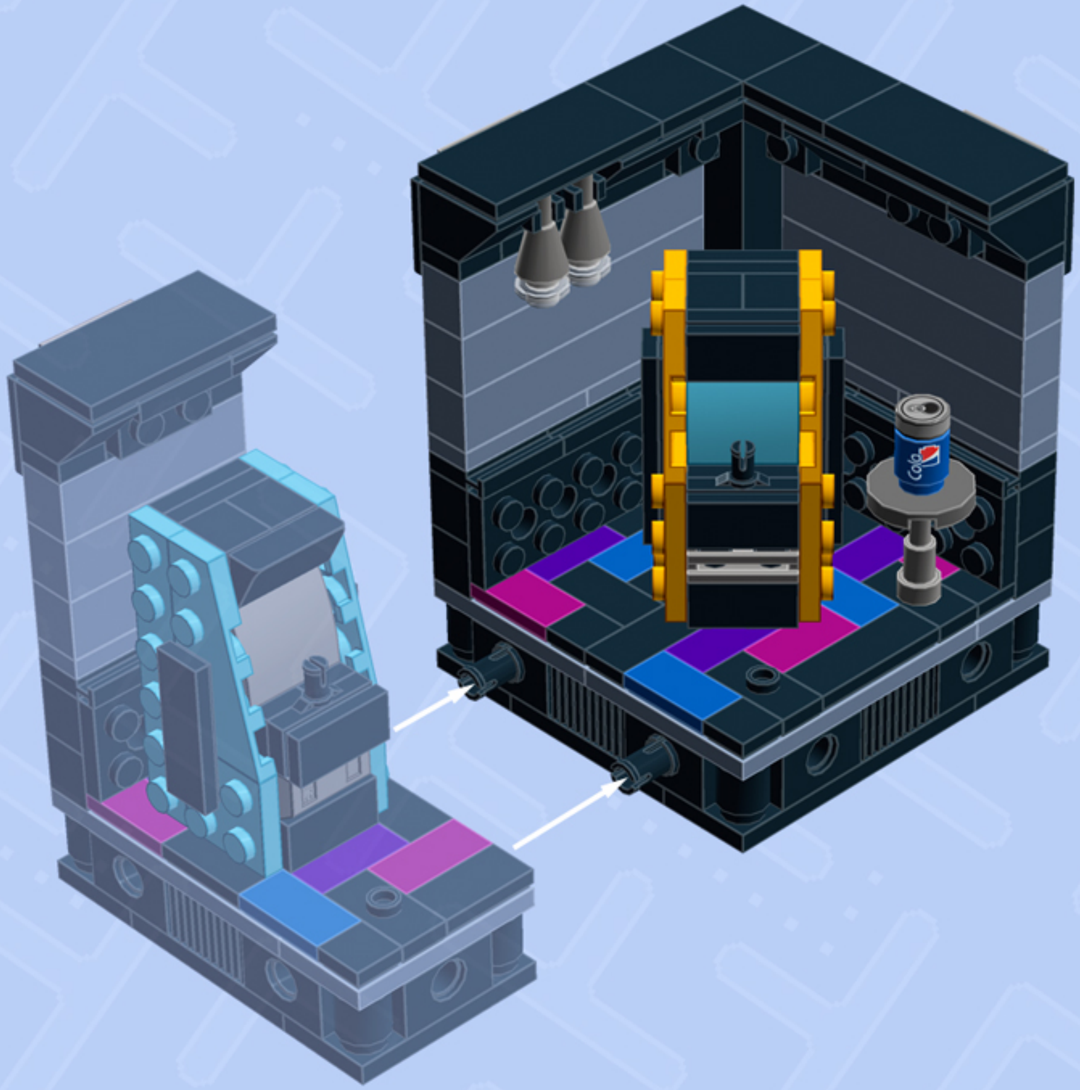

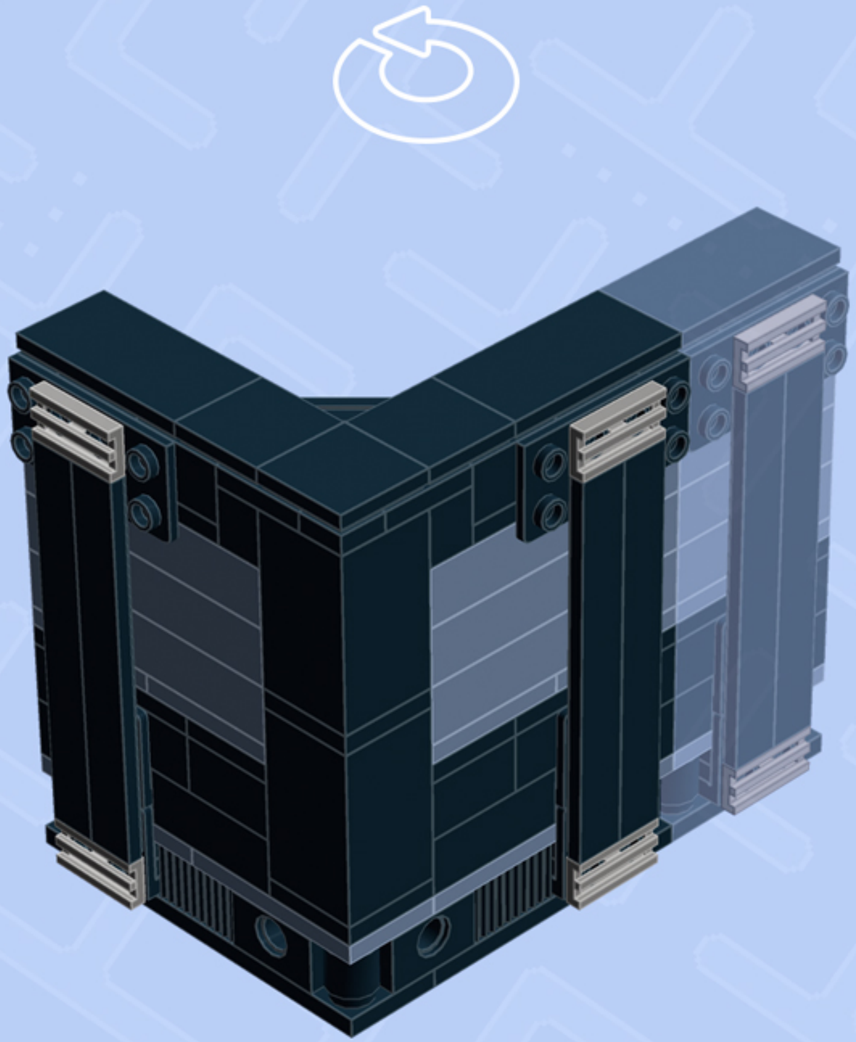

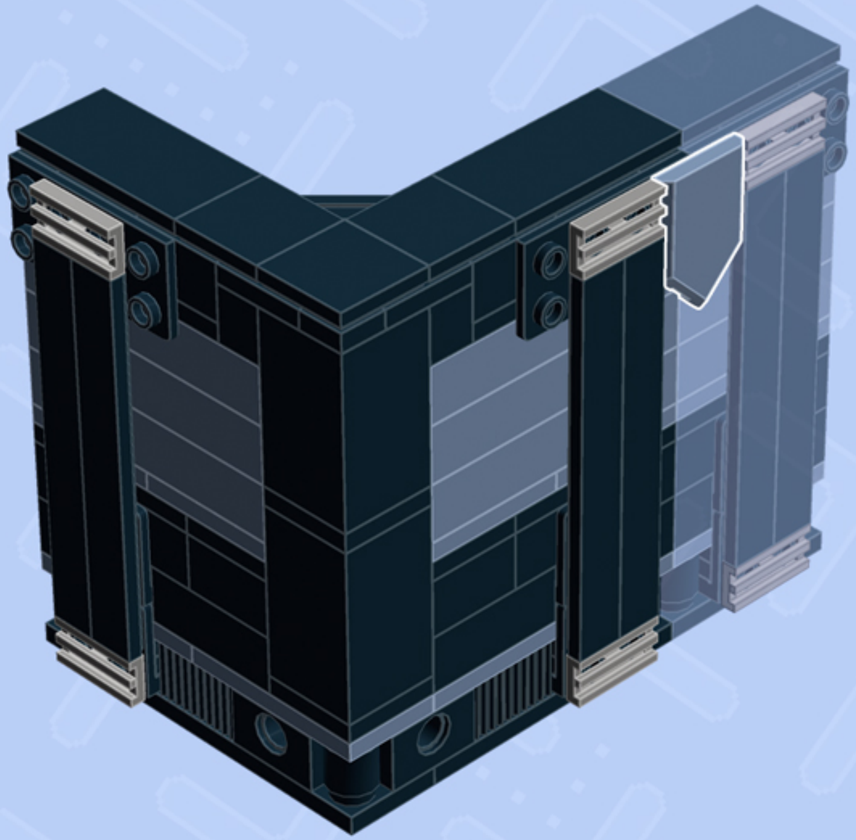

Modular Arcade units are designed to connect together, letting you create a miniature arcade that's entirely unique. Here's a few fun ideas to get you started!

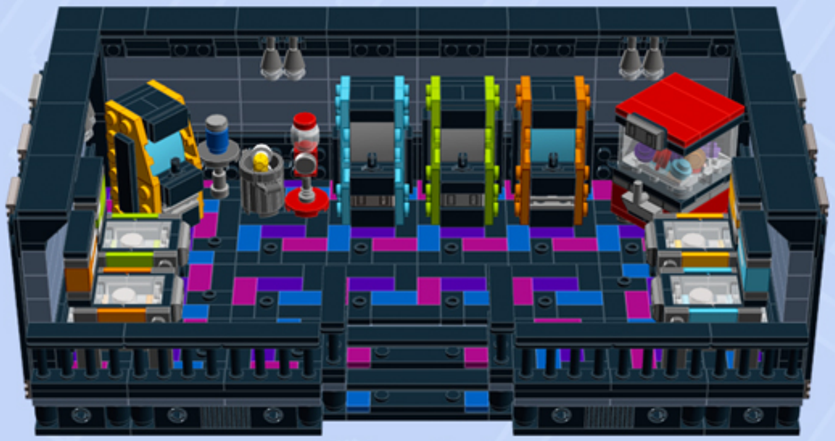

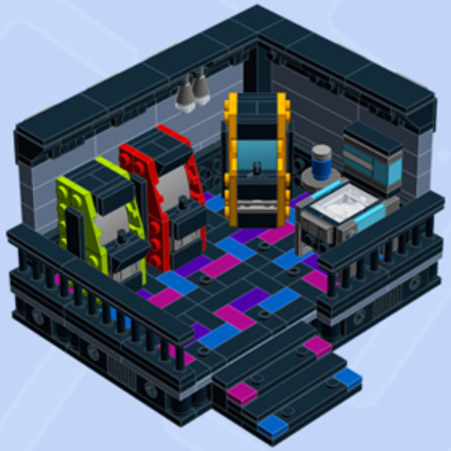

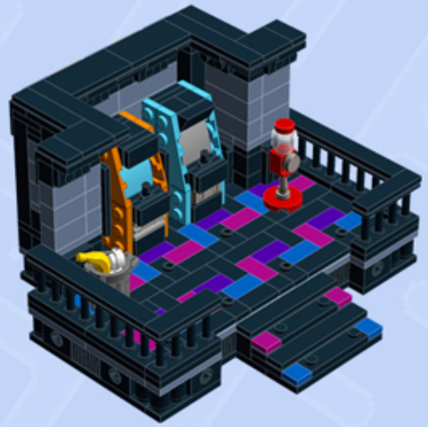

For more fun builds,
please stop by chrismcveigh.com,
visit me at facebook.com/c.mcveigh.photos,
or follow me on twitter @actionfigured

Purchase custom building kits at shop.chrismcveigh.com

These building guides are for personal use only. Unauthorized duplication, distribution and/or modification of these guides, in whole or in part, is strictly prohibited. The models contained within these guides are the copyright of Chris McVeigh, unless otherwise stated. Unauthorized reproduction of these models for resale, either in whole or as a building kit, is strictly prohibited.
© 2016 CHRIS MCVEIGH
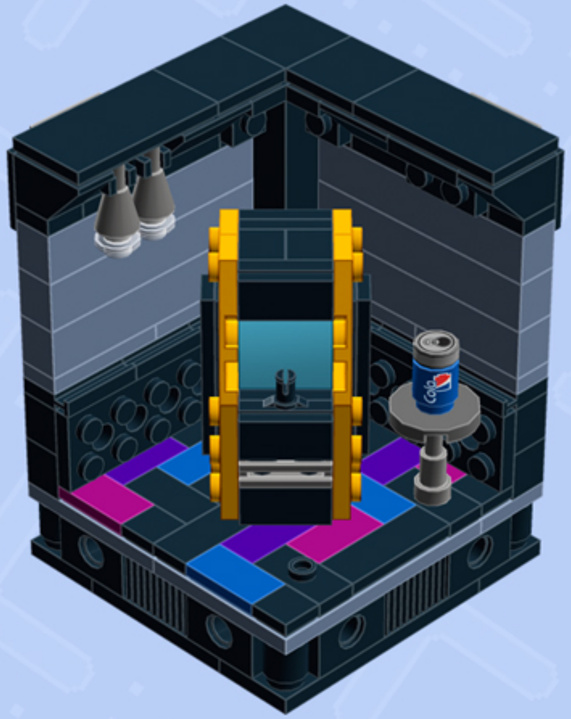
LEGO is a registered trademark of The LEGO Group.